1 结构示意图:

1 Sectional Drawings:

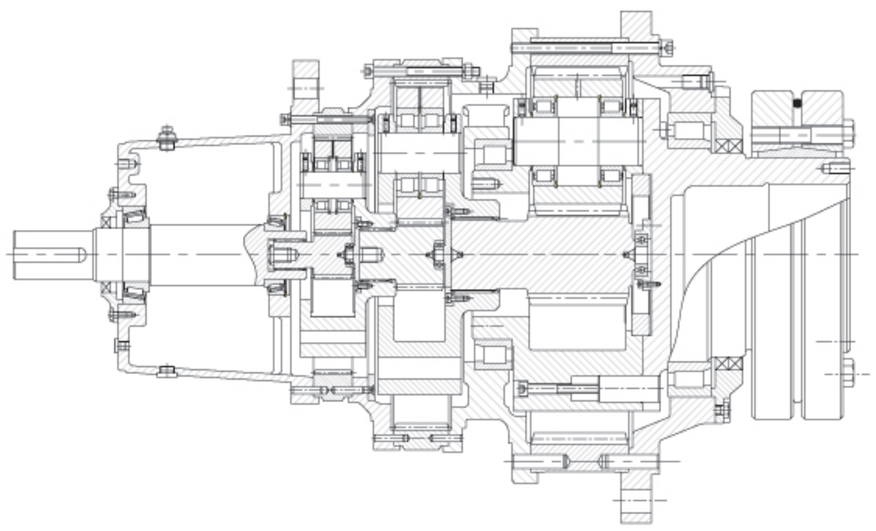

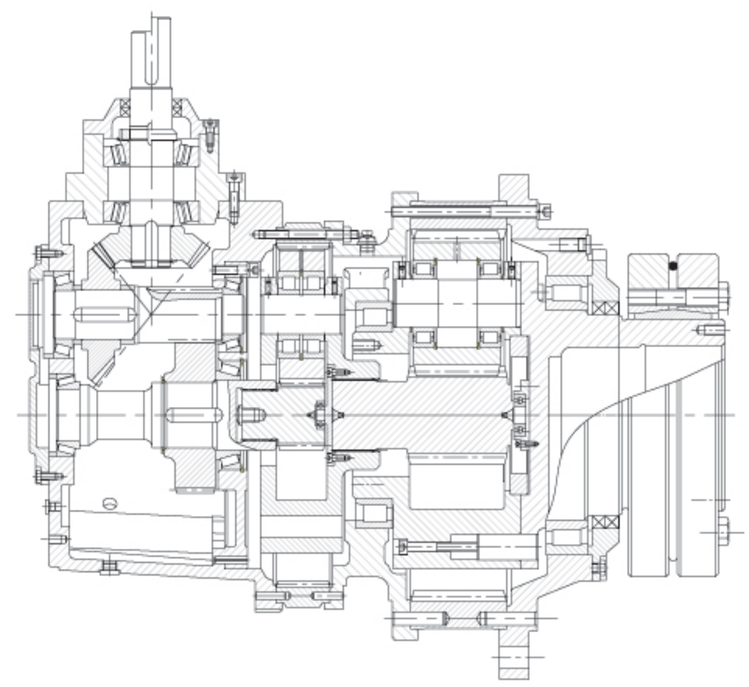

2 型号表示方法 :

2 Type Designation:

P 3 N A 10 - 140 - Y-11 +B42 -B51 - 90

- P系列 P Series
- 行星齿轮传动级数 Stages
- 输入形式 Input Modes
  - *N = 标准型(同轴式)/ Standard (coaxial)*
  - *S = 一级斜齿平行轴/ Helical gear stage*
  - *L = 一级锥齿直交轴 / Bevel gear stage*
  - *K = 一级锥齿-斜齿直交轴/ Bevel-helical gear stage*
- 输出方式 Output Modes
  - *A=带锁紧盘空心轴Hollow shaft with shrink disk*
  - *B=平键实心轴Solid shaft with parallel key*
  - *C=渐开线花键空心轴Hollow shaft with involute splines*
  - *D=渐开线花键实心轴Solid shaft with involute splines*
- 规格 Size
- 公称减速比 Nominal Ratio
- 输入部分 Input Part
  - *Y=电机 Motor*
  - *F=法兰连接Connection Flange*
  - *轴输入时不标 No Code for Shaft Input*
- 附件和特殊要求 Accessories and Special Requests
- 安装方位 Mounting Positions
- 电机接线盒位置 Positions of Motor Terminal Box

P

3 齿轮箱输入\输出方式：

3 Input and Output Modes:

输入形式 Input modes:

二级行星齿轮传动 2-stage planetary gear unit

P2N..
(i:25-40)

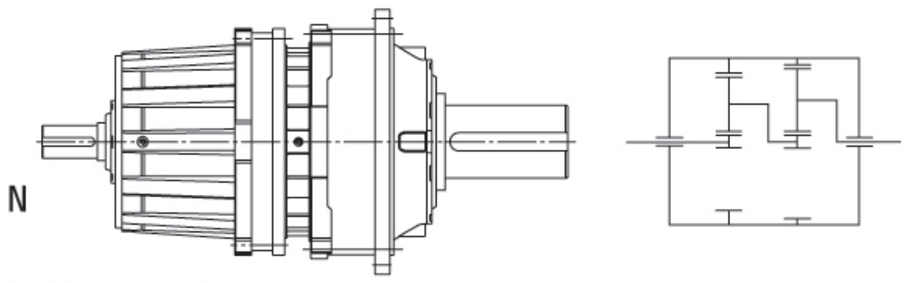

N

标准型(同轴式) Standard (Coaxial)

P2S..
(i:45-125)

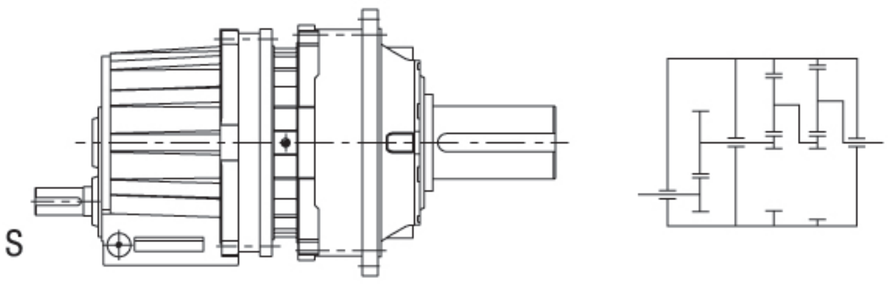

S

一级斜齿平行轴 Planetary gear units with primary helical gear stage

P2L..
(i:31.5-100)

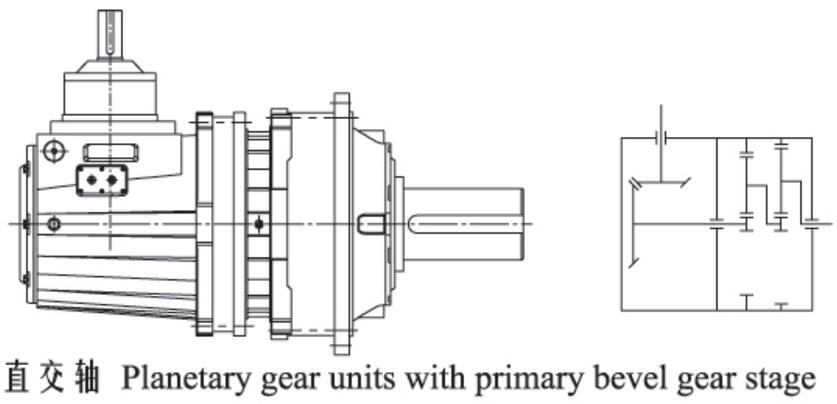

L

一级锥齿直交轴 Planetary gear units with primary bevel gear stage

P2K..
(i: 112-500)

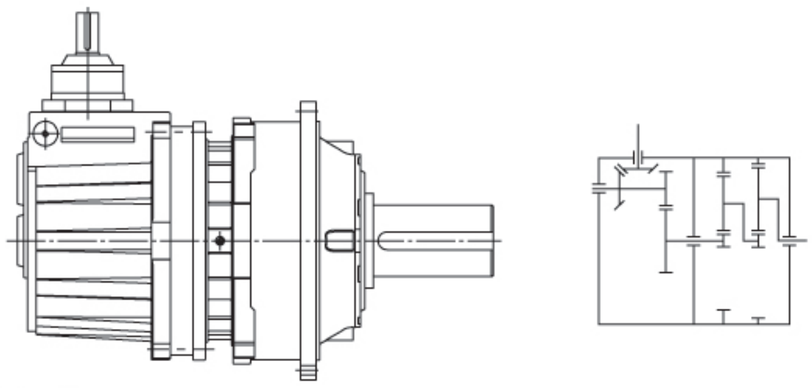

K

一级锥齿-斜齿直交轴 Planetary gear units with primary bevel-helical gear stage

三级行星齿轮传动 3-stage planetary gear unit

P3N..
(i:140-280)

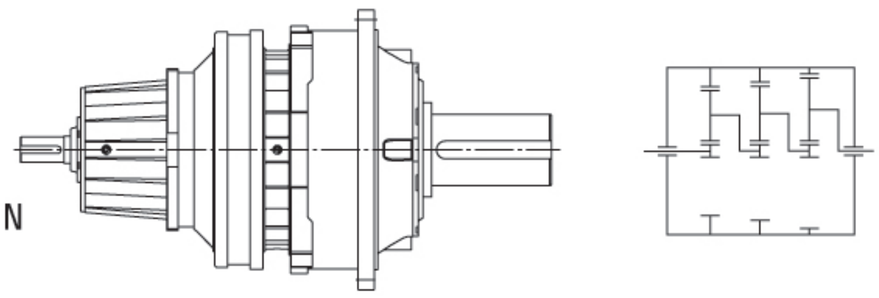

N

标准型(同轴式) Standard (Coaxial)

P3S..
(i:280-900)

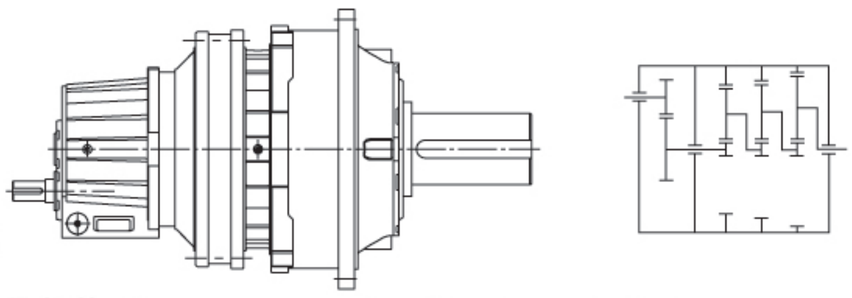

S

一级斜齿平行轴 Planetary gear units with primary helical gear stage

P3K..
(i:560-4000)

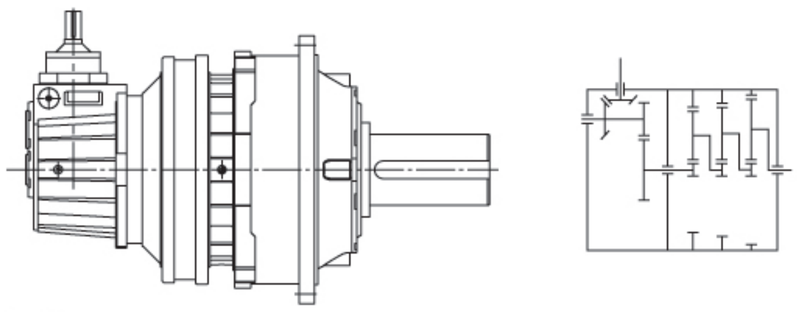

K

一级锥齿-斜齿直交轴 Planetary gear units with primary bevel-helical gear stage

输出方式 Output modes:

P..A..

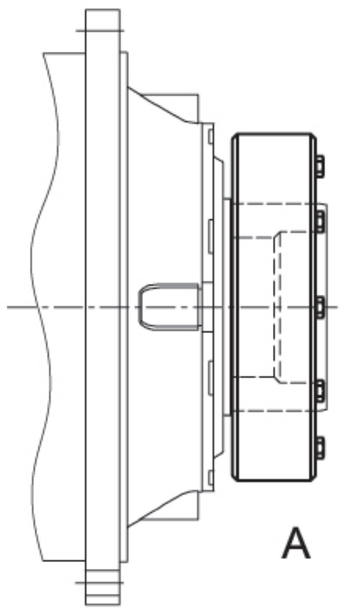

A

锁紧盘空心轴
Hollow shaft with shrink disk

P..B..

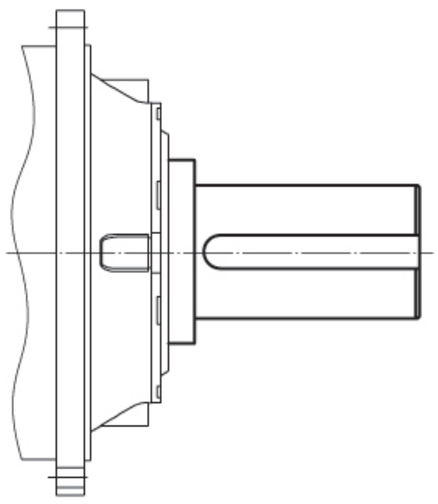

B

平键实心轴
Solid shaft with parallel keys

P..C..

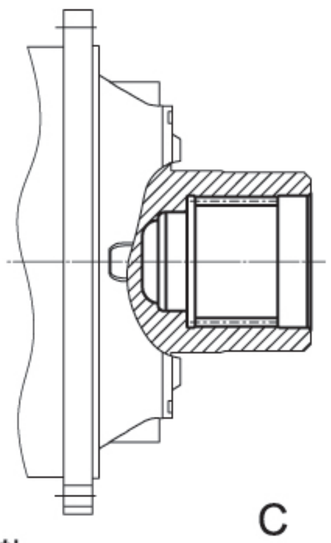

C

花键空心轴
Hollow shaft with internal splines

P..D..

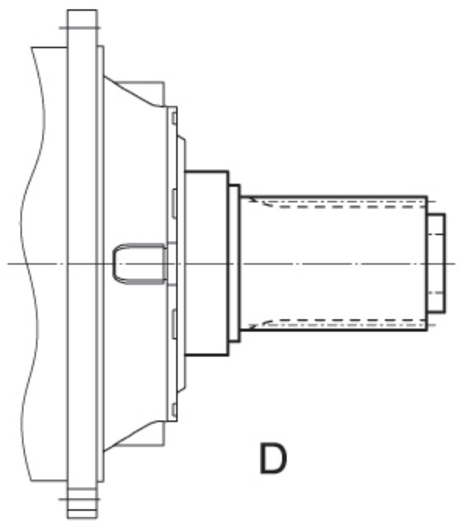

D

花键实心轴
Solid shaft with external splines

P

4 安装方位和电机接线盒位置：

4 Mounting Position, Position of Motor Terminal Box:

		水平安装 Horizontal	
1 同轴式齿轮箱 Coaxial planetary gear units	P.N.	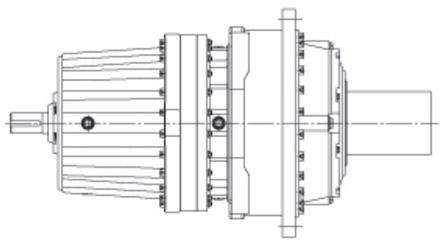 B5	
2 斜齿－行星齿轮箱 Helical-planetary gear units	P.S.	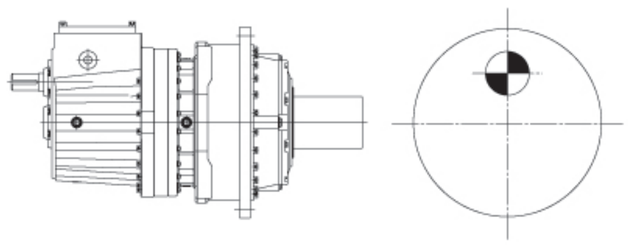 B51*	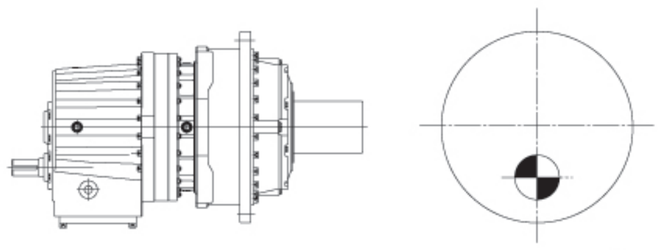 B53
		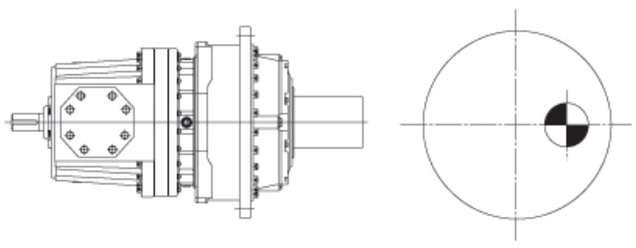 B52	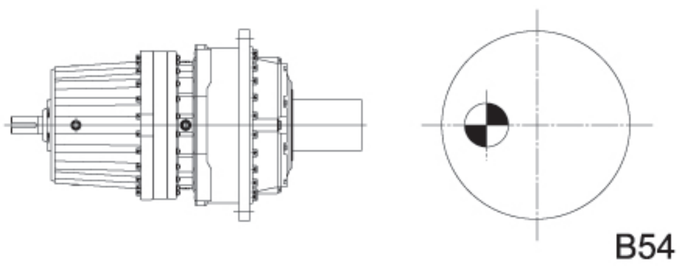 B54
3 锥齿－行星齿轮箱 Bevel-planetary gear units	P.L.	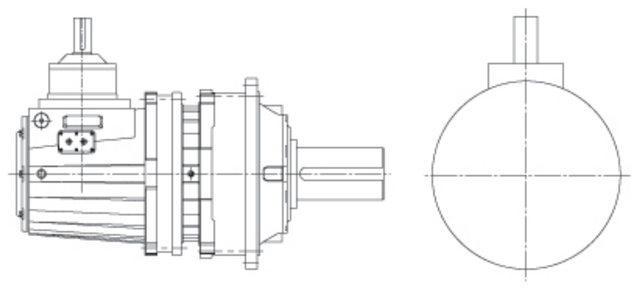 B51*	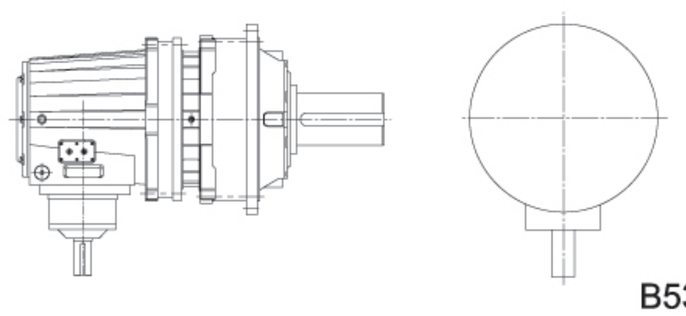 B53
		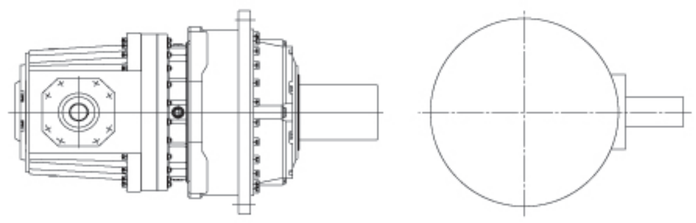 B52	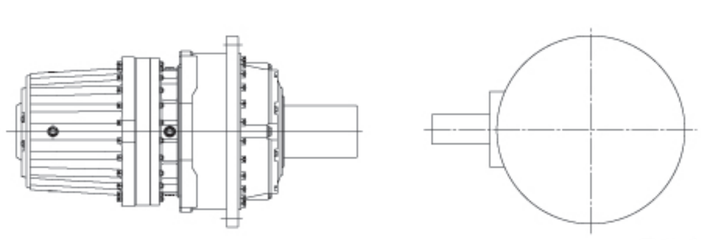 B54
4 锥齿－斜齿－行星齿轮箱 Bevel-helical-planetary gear units	P.K.	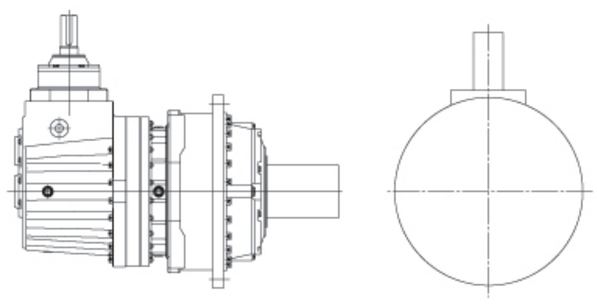 B51*	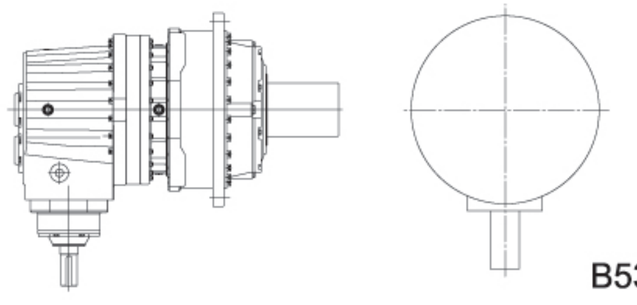 B53
		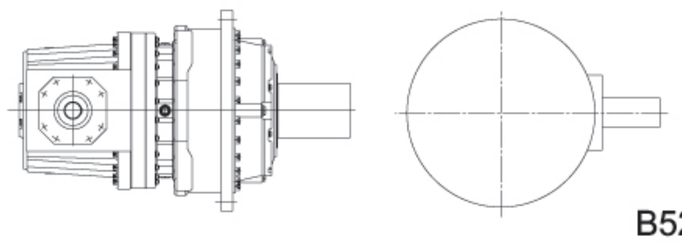 B52	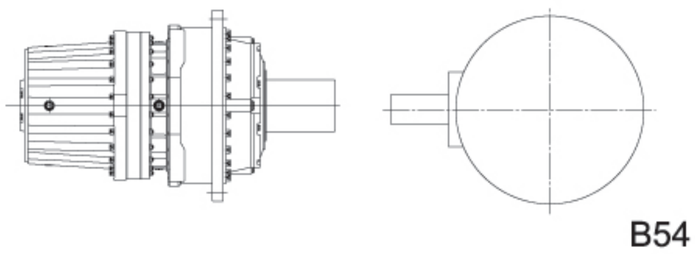 B54

* 需考虑齿轮箱的润滑，请与我司联系。

P

垂直安装 *) Vertical		电机接线盒位置 Position of Motor Terminal Box
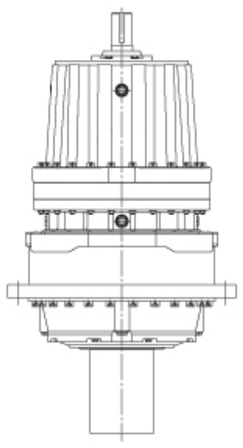 V1	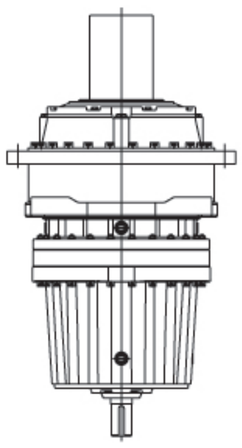 V3	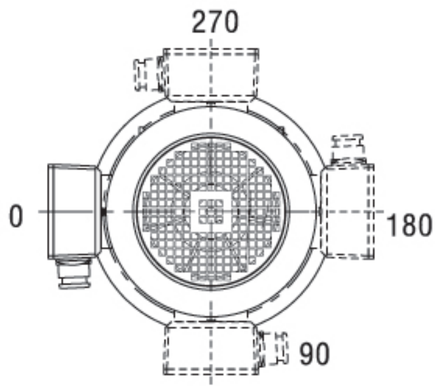
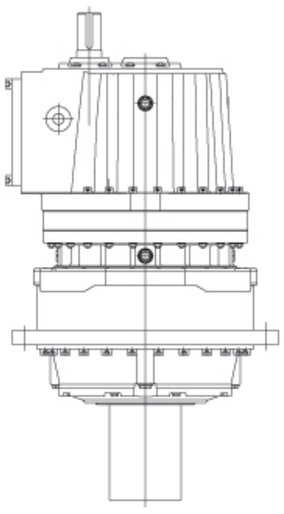 V11	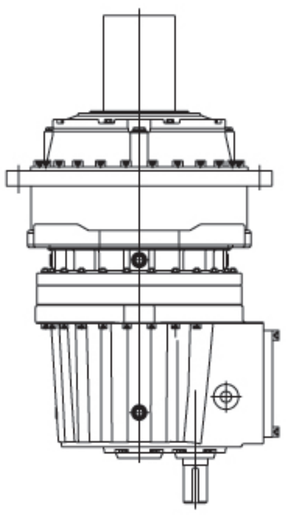 V31	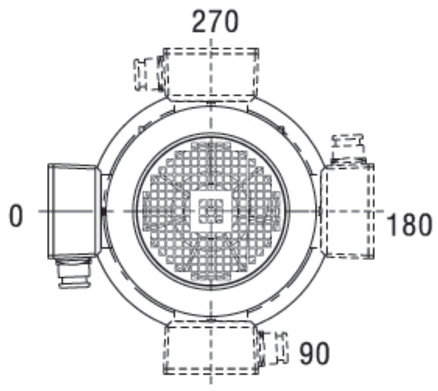
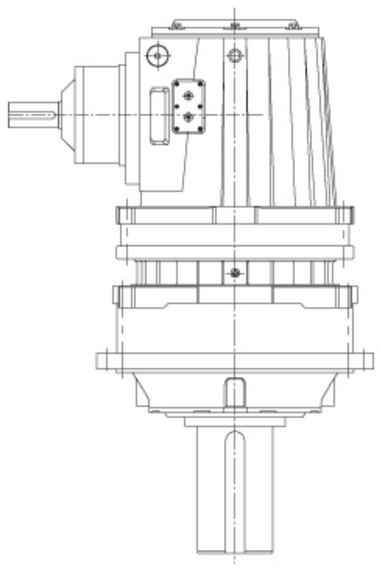 V11	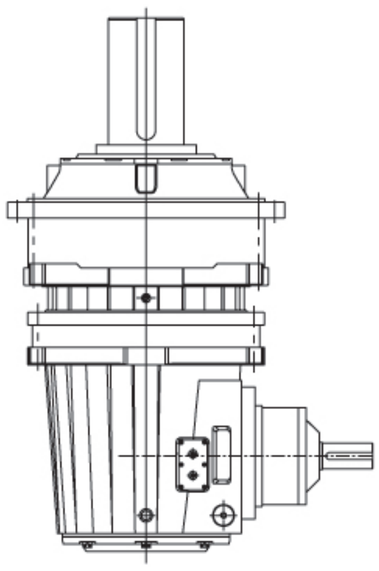 V31	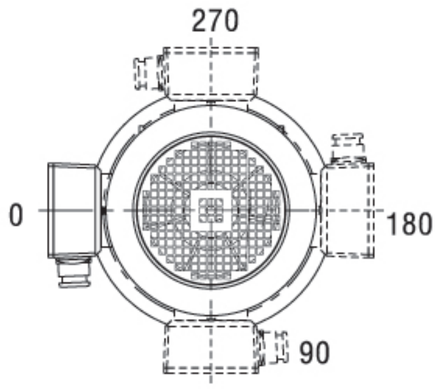
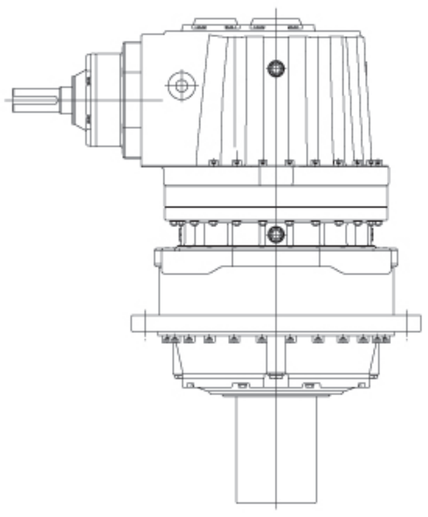 V11	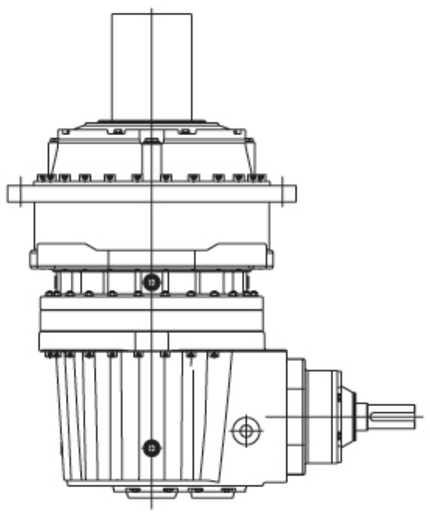 V31	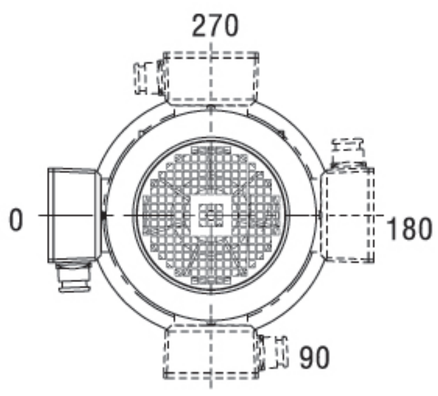

* If lubrication required, please consult us.

P

5 选型及举例：　　5 Type Selection and Example:

序号 Steps	说　明 Description	代号 Symbols	参　数　计　算 Parameters Calculation and Guidelines
1	**被驱动设备系数** Driven Machine Factor	f_1	查8/P、9/P页f1表 Refer to f1 table on P8/P and P9/P.
2	原动机系数 Prime Mover Factor	f_2	原动机系数 Prime Mover Factor: f_2 电机、液压马达、汽轮机 Electric motor, hydraulic motor, turbine: 1.0 4-6缸活塞发动机，周期变化1：100至1：200 Piston engine with 4-6 cylinders, cyclic variation 1:100 to 1:200: 1.25 1-3缸活塞发动机，周期变化1：100 Piston engine with 1-3 cylinders, cyclic variation 1:100: 1.5
3	齿轮箱可靠度系数 Factor for gear unit reliability	S_F	查9/P页SF表 Refer to SF table on Page 9/P.
4	输入转速 Input Speed	n_1	≤1500 r/min 更高转速请咨询 Consult us if higher speed required.
5	确定减速比 Calculation of the ratio	i	$i=n_1/n_2$
6	确定齿轮箱类型 选择传动效率 Determination of gear unit type and transmission efficiency	η	Type / η: P2N.. 94%; P2L.. 93%; P2S.. 93%; P2K.. 91%; Type / η: P3N.. 92%; P3S.. 91%; P3K.. 89%
7	以被驱动设备所需的扭矩或功率，确定齿轮箱的输入功率 Calculation of the input power of the gear unit on basis of the torque and power required by the driven machine.	P_1	$P_1=T_2 \cdot n_1/(9550 \cdot i \cdot \eta)$ 或 or $P_1=P_2/\eta$
8	根据计算，查传动能力表，确定齿轮箱规格 Determination of gear unit size referring to the table of Transmission Capacity.	T_{2N} P_{1N}	$T_{2N} \geqslant T_2 \cdot f_1 \cdot f_2 \cdot S_F$ 或 or $P_{1N} \geqslant P_1 \cdot f_1 \cdot f_2 \cdot S_F$ 如果不满足条件：$3.33 \cdot P_1 \geqslant P_{1N}$，请向我们咨询。 If: $3.33 \cdot P_1 \geqslant P_{1N}$ is not met, Please consult us.
9	峰值扭矩校核 * Check Peak Torque	T_A	$P_{1N} \geqslant T_A \cdot n_1 \cdot f_3/9550$ f3: 每小时峰值负荷次数 Load peaks per hour 单向载荷 Steady direction of load: 1-5: 0.5; 6-30: 0.65; 31-100: 0.7; >100: 0.85 交变载荷 Alternating direction of load: 1-5: 0.7; 6-30: 0.95; 31-100: 1.10; >100: 1.25
10	输出轴径向力、轴向力校核 Check the radial and axial forces on the shafts.	F_{r1}/F_{r2} F_{a1}/F_{a2}	查30/P页Fr表 See Fr table on P30/P.
11	计算功率利用率确定其系数 Calculation of the utilization	f_{14}	功率利用率 Utilization $= P_1/P_{1N} \cdot 100\%$ 确定其系数f14. f14:factor for utilization 功率利用率 Utilization: 30%, 40%, 50%, 60%, 70%, 80%, 90%, 100% f14: 0.66, 0.77, 0.83, 0.90, 0.90, 0.95, 1.0, 1.0
12	环境温度系数 Ambient temperature factor	ft	查9/P页ft表 Refer to ft table on Page 9/P.
13	热容量校核 Check thermal capacity	P_G	$P_1 \leqslant P_G = P_{G1} \cdot f_t \cdot f_{14}$ 齿轮箱可不带辅助冷却装置。 no cooling device is required. 若不能满足上式,则齿轮箱需外加辅助冷却装置,敬请垂询。 if P1>PG, auxiliary cooling device should be installed. Consult BONENG if required.
14	确定润滑方式 Determination of lubrication system		详见56/P页润滑方式 For details about lubrication system, see P56/P.
15	按型号表示方法确定各项 Determination of every item included in the Type Designation		型号表示方法见2/P页 For details about Type Designation, see P 2/P.

* 峰值扭矩：最大负载扭矩，是指启动、制动或最大脉动载荷所引起的最大扭矩。（一般工况条件下峰值扭矩为启动或制动时的最大扭矩）
Peak torque: max. load torque, which means max. torque due to be caused from starting, braking or max. pulsating load. (Generally, it refers to peak starting or braking torque.)

P

选 型 举 例
Example

原动机：

电机功率：90kW

电机转速：n_1=1000r/min

最大启动扭矩：2000N・m

（由用户提供数据，如果无法提供则按照电机额定扭矩的1.6倍估算）

被驱动设备（工作机）

设备名称：斗式输送机

设备转速：12.5r/min

输出扭矩：68000N・m

工作制：12小时

每小时启动次数：大于3次

每小时工作周期：60%

环境温度：20℃

安装空间：室外安装

海拔高度：1000米以下

齿轮箱要求

平行轴输入,实心轴普通平键输出,输入轴向下,安装方位B53;

选型步骤：

1 确定齿轮箱类型:

1.1 确定传动比:$i=n_1/n_2$=1000/12.5=80

1.2 确定齿轮箱类型:

根据速比及输入、输出轴要求，可选：**P2SB..-B53**

2 确定齿轮箱规格：

2.1 确定齿轮箱的额定功率:

$P_1=T_2 \cdot n_1/(9550 \cdot i \cdot \eta)$

查表2/P页传动效率表, η=0.93

$P_1=T_2 \cdot n_1/(9550 \cdot i \cdot \eta)$

=68000×1000/(9550×80×0.93)=95.7kW

$P_{1N} \geqslant P_1 \times f_1 \times f_2$

查4/P页 f_1=1.5, 查2/P页 f_2=1

$P_{1N} \geqslant P_1 \times f_1 \times f_2$=95.7×1.5×1=143.6kW

根据传动能力表确定型号:P2SB14-80-B53

查得 P_{1N}=153kW iex=78.8

2.2 校核:

3.3×95.7=318.681≥P_{1N} 满足要求.

2.3 峰值扭矩校核:

P_{1N}=153kW≥$T_A \cdot n_1 \cdot f3/9550$

=2000×1000×0.5/9550=104.71kW 满足要求。

3 校核热容量：

公称功率利用率=P_1/P_{1N}=95.7/153=0.625=62.5%

查P系列选型表得 f_{14}=0.9 f_4=1.16

$P_{G1} \times f_4 \times f_{14}$=94×1.16×0.9=100.32kW＞$P_1$

因此无须外加辅助冷却装置就可满足设备要求。

润滑方式:浸油润滑.

4 确定型号：P2SB14-80-B53

Prime mover

Motor Power : 90kW

Motor Speed: n1=1000r/min

Max. starting toqrue: 2000N.m

(This value is usually provided by users. If not available, it is routine to calculate by 1.6 times of nominal torque of electric motor.)

Driven machine

Name : bucket converyor

Speed: 12.5r/min

Output torque: 68000N・m

Duty: 12h/d

Starts per hour: > 3 times

Operating cycle per hour: 60%

Ambient temperature: 20℃

Place of installation: in the open

Altitude: below 1000m

Gear Unit

Parallel input shafts, solid output shaft with parallel keys, input shaft facing downwards, mounting position B53

Selection steps:

1. Determination of gear unit type:

1.1 Calculation of the ratio:i=n1/n2=1000/12.5=80

1.2 Selection of gear unit type:

P2SB..-B53 selected(as per the ratio, input and output shafts).

2. Determination of gear unit size:

2.1 Calculation of the nominal power of gear unit:

P1=T2 ・n1/(9550・ i・ η)

In the table of transmission capacity on P2/P, η=0.93

P1=T2・ n1/(9550・ i ・ η)

=68000×1000/(9550× 80×0.93)=95.7kW

P1N≥P1×f1×f2

See P4/P, f1=1.5, and P2/P, f2=1

P1N ≥P1× f1× f2=95.7× 1.5 ×1=143.6kW

Selected from the table of transmission capacity: P2SB14-80-B53, where P1N=153kW iex=78.8

2.2 Check

3.3× 95.7=318.681 ≥P1N, satisfied.

2.3 Check of peak torque

P1N=153kW ≥TA× n1 ×f3/9550

=2000×1000 ×0.5/9550=104.71kW, satisfied.

3. Check of thermal capacity

Nominal power utilization=P1/P1N=95.7/153=0.625=62.5%

So f14=0.9 f4=1.16

PG1× f4× f14=94× 1.16× 0.9=100.32kW > P1

So no auxiliary cooling device is needed

Lubrication: Dip

4. The type selected: **P2SB14-80-B53**

服务系数 Service Factors

表1 Table 1 被驱动设备系数 Factor for driven machine f1

被驱动设备 Driven machines		日带载运行时间（小时） Effective daily operating period under load in hours ≤ 2	> 2–10	> 10
污水处理	**Waste water treatment**			
浓缩器(中心传动)	Thickeners (central drive)	–	–	1.2
压滤器	Filter presses	1.0	1.3	1.5
絮凝器	Flocculation apparata	0.8	1.0	1.3
曝气机	Aerators	–	1.8	2.0
搂集设备	Raking equipment	1.0	1.2	1.3
纵向、回转组合式接集装置	Combined longitudinal and rotary rakes	1.0	1.3	1.5
浓缩器	Pre-thickeners	–	1.1	1.3
螺杆泵	Screw pumps	–	1.3	1.5
水轮机	Water turbines	–	–	2.0
泵	Pumps			
离心泵	Centrifugal pumps	1.0	1.2	1.3
容积式泵	Positive-displacement pumps			
1个活塞	1 piston	1.3	1.4	1.8
>1个活塞	> 1piston	1.2	1.4	1.5
挖泥机	**Dredgers**			
斗式运输机	Bucket conveyors	–	1.6	1.6
倾卸装置	Dumping devices	–	1.3	1.5
履带式行走机构	Carterpillar travelling gears	1.2	1.6	1.8
斗式挖掘机	Bucket wheel excavators			
用于捡拾	as pick-up	–	1.7	1.7
用于粗料	for primitive material	–	2.2	2.2
切碎机	Cutter heads	–	2.2	2.2
行走机构 *	Traversing gears	–	1.4	1.8
弯板机	**Plate bending machines**	–	1.0	1.0
化学工业	**Chemical industry**			
挤出机	Extruders	–	–	1.6
调浆机	Dough mills	–	1.8	1.8
橡胶砑光机	Rubber calenders	–	1.5	1.5
冷却圆筒	Cooling drums	–	1.3	1.4
混料机，用于	Mixers for			
均匀介质	uniform media	1.0	1.3	1.4
非均匀介质	non-uniform media	1.4	1.6	1.7
搅拌机，用于	Agitators for media with			
密度均匀介质	uniform density	1.0	1.3	1.5
不均匀介质	non-uniform density	1.2	1.4	1.6
不均匀气体吸收	non-uniform gas absorption	1.4	1.6	1.8
烘炉	Toasters	1.0	1.3	1.5
离心机	Centrifuges	1.0	1.2	1.3
金属加工设备	**Metal working mills**			
翻板机	Plate tilters	1.0	1.0	1.2
推钢机	Ingot pushers	1.0	1.2	1.2
绕线机	Winding machines	–	1.6	1.6
冷床横移架	Cooling bed transfer frames	–	1.5	1.5
辊式矫直机	Roller straighteners	–	1.6	1.6
辊道	Roller tables			
连续式	continuous	–	1.5	1.5
间歇式	intermittent	–	2.0	2.0
可逆式轧管机	Reversing tube mills	–	1.8	1.8
剪切机	Shears			
连续式 *	continuous	–	1.5	1.5
曲柄式 *	crank type	1.0	1.0	1.0
连铸机驱动装置	Continuous casting drivers	–	1.4	1.4
轧机	Rolls			
可逆式开坯机	Reversing blooming mills	–	2.5	2.5
可逆式板坯轧机	Reversing slabbing mills	–	2.5	2.5
可逆式线材轧机	Reversing wire mills	–	1.8	1.8
可逆式薄板轧机	Reversing sheet mills	–	2.0	2.0
可逆式中厚板轧机	Reversing plate mills	–	1.8	1.8
辊缝调节驱动装置	Roll adjustment drives	0.9	1.0	–

被驱动设备 Driven machines		日带载运行时间（小时） Effective daily operating period under load in hours ≤ 2	> 2–10	> 10
输送机械	**Conveyors**			
斗式输送机	Bucket conveyors	–	1.4	1.5
绞车	Hauling winches	1.4	1.6	1.6
卷扬机	Hoists	–	1.5	1.8
皮带输送机≤150kW	Belt conveyors ≤ 150 kW	1.0	1.2	1.3
皮带输送机≥150kW	Belt conveyors ≥ 150 kW	1.1	1.3	1.4
货用电梯 *	Goods lifts	–	1.2	1.5
客用电梯 *	Passenger lifts	–	1.5	1.8
刮板式输送机	Apron conveyors	–	1.2	1.5
自动扶梯	Escalators	1.0	1.2	1.4
轨道行走机构	Rail travelling gears	–	1.5	-
变频装置	**Frequency converters**	–	1.8	2.0
往复式压缩机	**Reciprocating compressors**	–	1.8	1.9
起重机械 **	**Cranes**			
回转机构 *	Slewing gears		1.4	1.8
俯仰机构	Luffing gears		1.1	1.4
行走机构	Travelling gears		1.6	2.0
提升机构	Hoisting gears		1.1	1.4
转臂式起重机	Derricking jib cranes		1.2	1.6
冷却塔	**Cooling towers**			
冷却塔风扇	Cooling tower fans	–	–	2.0
风机（轴流和离心式）	Blowers (axial and radial)	–	1.4	1.5
食品工业	**Food industry**			
蔗糖生产	Cane sugar production			
甘蔗切碎机 *	Cane knives	–	–	1.7
甘蔗碾磨机	Cane mills	–	–	1.7
甜菜糖生产	Beet sugar production			
甜菜绞碎机	Beet cossettes macerators,	–	–	1.2
榨取机，机械制冷机、蒸煮机	Extraction plants, Techanical refrigerators, Juice boilers,	–	–	1.4
甜菜清洗机 甜菜切碎机	Sugar beet washing machines, Sugar beet cutters	–	–	1.5
造纸机械	**Paper machines**			
各种类型 ***	of all-kind	–	1.8	2.0
碎浆机驱动装置	Pulper drives	来电咨询		On request
离心式压缩机	**Centrifugal compressors**	–	1.4	1.5
索道缆车	**Cableways**			
运货索道	Material ropeways	–	1.3	1.4
往返系统空中索道	To- and fro system aerial ropeways	–	1.6	1.8
T型杆升降机	T-bar lifts	–	1.3	1.4
连续索道	Continuous ropeways	–	1.4	1.6
水泥工业	**Cement industry**			
混凝土搅拌器	Concrete mixers	–	1.5	1.5
破碎机 *	Breakers	–	1.2	1.4
回转窑	Rotary kilns	–	–	2.0
管式磨机	Tube mills	–	–	2.0
选粉机	Separators	–	1.6	1.6
辊压机	Roll crushers	–	–	2.0

P

表1
Table 1

被驱动设备系数 Factor for driven machine f1

被驱动设备 Driven machines	日带载运行时间（小时）Effective daily operating period under load in hours ≤ 2	> 2–10	> 10
木材工业 Wood industry			
剥皮机 Bark peeler			
进给传动 Feed drive	1.25	1.25	1.50
主传动 Main drive	1.75	1.75	1.75
运送机 Transporter			
燃烧器、反复锯、转塔式、转运输送 Burner, band saw, turret lathe, transportation	1.25	1.25	1.50
主要载荷、重载 mainly heavy load	1.50	1.50	1.50
主原木、地坯 mainly raw log	1.75	1.75	2.00
输送链 Conveyor chain			
地板 Parquet	1.50	1.50	1.50
生材 Unprocessed materials	1.50	1.50	1.75
切割链 Cutting chain			
锯传动、牵引 Saw drive and traction	1.50	1.50	1.75
剥皮筒 Barking drum	1.75	1.75	2.00
进给传动 Feed drive			
轧边、修木、刨床进给、分类台、自动倾斜升降 Edge banding, wood sanding Planer feeding, sorter Automatic inclination and lift	1.25	1.25	1.50
多轴送进、原木搬运和旋转 Multi-spindle feeding Log transport and turning	1.75	1.75	1.75
搬运 Transport			
料盘、胶合板车床传动、输送链、起重式 Delivery plate Plywood lathe drive Conveyor chain, crane type	1.50	1.50	1.75

被驱动设备 Driven machines	日带载运行时间（小时）Effective daily operating period under load in hours ≤ 2	> 2–10	> 10
塑料工业 Plastic industry			
碾磨机、复式磨、涂料、涂膜、输送管、拉杆、薄型 Grinding mill, compound mill Coating and film coating Pipe, pull rod, thin plastic manufacture	1.25	1.25	1.25
管型、拔桩机 Tube, pile drawer accessories	1.25	1.25	1.50
连续混合机、压延机、吹膜、欲塑化 Continuous mixer, calender Film blower, plasticizer	1.50	1.50	1.50
分批混合机 Batch mixer	1.75	1.75	1.75
橡胶工业 Rubber industry			
连续式强力内式拌合机、混合轧机、分批下料碾磨机、（双光棍式除外）精炼机、压延机 Continuous powerful internal stirrer Roller mixer, batch charger Crusher(except double rolls) Refiner, calender	1.50	1.50	1.50
双棍式夹持进给及混合碾磨机 Double-roller clamp feeding Mixer grinder	1.25	1.25	1.50
分批式强力内式拌合机、双光棍式单槽纹棍 碾碎机加热器、双光棍式分批下料碾磨机 Batch powerful internal stirrer, Double roll single groove roller grinder, Crusher heater, double rolls,Batch charging grinder	1.75	1.75	1.75
波形棍式碾碎机 Wave roll crusher	2.00	2.00	2.00
发电机和励磁机 Generator and Exciter	1.00	1.00	1.25
锤式破碎机 Hammer crusher	1.75	1.75	2.00
砂碾机 Sand roller	1.25	1.25	1.50

1. 工作机额定功率P2的确定：
   *）按最大的扭矩确定额定功率。
   **）实际的服务系数应根据准确的载荷分类进行选择，具体可咨询我司。
   ***）检验热容量是绝对必要的。
2. 所列各项系数均为经验值。使用这些系数的前提条件是，所述机械设备应符合通常的设计规范和载荷条件。如遇特殊情况，请及时与我们取得联系。
3. 对于那些未列入此表的工作机械，请与我们联系。

1. Determination of nominal power of driven machine
   *) The normal power usually corresponds to max. torque
   **) The actual service factors should comply with the actually classified loads. For more details, please consult us.
   ***) A check for thermal capacity is absolutely necessary.
2. The factors listed above are empirical values only. Prerequisite for their applications is that the machinery and equipment correspond to generally accepted design and load specifications. In case of deviations, please consult us.
3. For driven machines not listed in the table, please consult us.

表2
Table 2

齿轮箱可靠度系数 Factor for gear unit reliability SF

一般设备，减速机失效后仅仅引起单机停产，并且更换零部件比较容易，损失较小 Ordinary: single machine halts when gear units fail, easy to replace spare parts and minor loss occurred.	1.0≤SF≤1.3
重要设备，减速机失效后使生产线或者全厂停工，停机事故损失比较大 Important: a product line or an entire plant halts when gear units fail, heavy loss.	1.3 < SF≤1.5
高可靠度要求，减速机失效后可能造成重大停产事故，造成极大的经济损失，以及人身生命事故 Highly reliable: severe production problem happens when gear units fail, enormous loss and life injuries.	1.5 < SF

P

表3
Table 3

环境温度系数 Thermal Factor ft

环境温度 Ambient Temperature	每小时工作周期（ED）百分比% Operating cycle per hour (ED) in % 100%	80%	60%	40%	20%
10°C	1.14	1.20	1.32	1.54	2.04
20°C	1.00	1.06	1.16	1.35	1.79
30°C	0.87	0.93	1.00	1.18	1.56
40°C	0.71	0.75	0.82	0.96	1.27
50°C	0.55	0.58	0.64	0.74	0.98

6 传动能力表：

6 Transmission Capacity:

6.1 P2N..和P2S..传动能力表：（i=25～125）

6.1 P2..N and P2..S(i=25-125):

n_1 (r/min)	n_{2N} (r/min)	i_N	P2..09			P2..10			P2..11			P2..12			P2..13			P2..14		
			T_{2N} (kN·m)	iex	P_{1N} (kW)	T_{2N} (kN·m)	iex	P_{1N} (kW)	T_{2N} (kN·m)	iex	P_{1N} (kW)	T_{2N} (kN·m)	iex	P_{1N} (kW)	T_{2N} (kN·m)	iex	P_{1N} (kW)	T_{2N} (kN·m)	iex	P_{1N} (kW)
1450	58	25	22	25.634	130	31	25.634	184	42	25.875	246	60	24.983	365	83	24.958	505	117	24.958	712
960	38.4				86			122			163			241			334			471
710	28.4				64			90			121			179			247			349
1450	51.8	28	22	28.058	119	31	28.058	168	42	28.233	226	60	27.26	334	83	27.318	461	117	27.318	650
960	34.3				79			111			150			221			305			431
710	25.4				58			82			111			164			226			318
1450	46	31.5	22	31.142	107	31	31.142	151	42	31.207	204	60	30.13	302	83	30.321	416	117	30.321	586
960	30.5				71			100			135			200			275			388
710	22.5				53			74			100			148			204			287
1450	40.8	35.5	22	35.201	95	31	35.201	134	42	35.072	182	60	33.863	269	83	34.272	368	117	34.272	518
960	27				63			89			120			178			243			343
710	20				46			65			89			132			180			254
1450	36.3	40	22	40.781	82	31	40.781	115	42	40.302	158	60	38.912	234	83	39.706	317	117	39.706	447
960	24				54			76			105			155			210			296
710	17.8				40			57			77			115			155			219
1450	32.2	45	22	45.601	73	31	45.601	103	42	43.209	148	60	41.719	218	83	43.797	288	117	43.797	406
960	21.3				49			68			98			145			191			269
710	15.8				36			51			72			107			141			199
1450	29	50	22	51.544	65	31	51.544	91	42	48.561	131	60	46.887	194	83	49.505	255	117	49.505	359
960	19.2				43			60			87			129			169			238
710	14.2				32			45			64			95			125			176
1450	25.9	56	22	59.715	56	31	59.715	79	42	55.802	114	60	53.878	169	83	57.353	220	117	57.353	310
960	17.1				37			52			76			112			145			205
710	12.7				27			39			56			83			108			152
1450	23	63	22	61.953	54	31	61.953	76	42	63.399	101	60	61.213	149	83	59.977	210	117	59.977	296
960	15.2				36			50			67			99			139			196
710	11.3				26			37			49			73			103			145
1450	20.4	71	22	71.775	47	31	71.775	66	42	72.853	88	60	70.34	130	83	69.485	181	117	69.485	256
960	13.5				31			43			58			86			120			169
710	10				23			32			43			63			89			125
1450	18.1	80	22	78.782	42	31	78.782	60	42	81.303	78	60	78.499	116	83	78.827	160	117	78.827	225
960	12				28			40			52			77			106			149
710	8.9				21			29			38			57			78			110
1450	16.1	90	22	91.272	37	31	91.272	52	42	93.426	68	60	90.205	101	83	91.324	138	117	91.324	195
960	10.7				24			34			45			67			91			129
710	7.9				18			25			33			49			68			95
1450	14.5	100	22	99.735	33	31	99.735	47	42	99.678	64	60	96.241	95	83	95.963	131	117	95.963	185
960	9.6				22			31			42			63			87			123
710	7.1				16			23			31			46			64			91
1450	12.9	112	22	115.55	29	31	115.55	41	42	114.54	56	60	110.59	82	83	111.18	113	117	111.18	160
960	8.6				19			27			37			55			75			106
710	6.3				14			20			27			40			56			78
1450	11.6	125	22	124.74	27	31	124.74	38	42	123.14	52	60	118.9	77	83	119.12	106	117	119.12	149
960	7.7				18			25			34			51			70			99
710	5.7				13			18			25			38			52			73

P2N
P2S

P

P2N

P2S

P2..16			P2..17			P2..18			P2..19			P2..20			P2..21			P2..22			i_N	n_{2N} (r/min)	n_1 (r/min)
T_{2N} (kN·m)	iex	P_{1N} (kW)	T_{2N} (kN·m)	iex	P_{1N} (kW)	T_{2N} (kN·m)	iex	P_{1N} (kW)	T_{2N} (kN·m)	iex	P_{1N} (kW)	T_{2N} (kN·m)	iex	P_{1N} (kW)	T_{2N} (kN·m)	iex	P_{1N} (kW)	T_{2N} (kN·m)	iex	P_{1N} (kW)			
		982			1239			1485			1683			2019			2236			2567		58	1450
160	24.75	650	202	24.75	821	244	24.958	983	295	26.622	1114	354	26.622	1337	392	26.622	1480	450	26.622	1699	25	38.4	960
		481			607			727			824			989			1095			1257		28.4	710
		897			1132			1356			1537			1845			2043			2345		51.8	1450
160	27.09	594	202	27.09	750	244	27.318	898	295	29.139	1018	354	29.139	1221	392	29.139	1352	450	29.139	1553	28	34.3	960
		439			554			664			753			903			1000			1148		25.4	710
		808			1020			1222			1385			1662			1840			2113		46	1450
160	30.068	535	202	30.068	675	244	30.321	809	295	32.342	917	354	32.342	1100	392	32.342	1219	450	32.342	1399	31.5	30.5	960
		396			500			599			678			814			901			1035		22.5	710
		715			903			1081			1225			1470			1628			1869		40.8	1450
160	33.987	473	202	33.987	598	244	34.272	716	295	36.557	811	354	36.557	974	392	36.557	1078	450	36.557	1238	35.5	27	960
		350			442			529			600			720			797			915		20	710
		617			779			933			1058			1269			1405			1613		36.3	1450
160	39.375	409	202	39.375	516	244	39.706	618	295	42.353	700	354	42.353	840	392	42.353	930	450	42.353	1068	40	24	960
		302			381			457			518			621			688			790		17.8	710
		574			725			864			980			1176			1284			1474		32.2	1450
160	42.318	380	202	42.318	480	244	42.867	572	295	45.725	649	354	45.725	778	392	46.357	850	450	46.357	976	45	21.3	960
		281			355			423			480			576			628			722		15.8	710
		508			641			765			867			1040			1136			1304		29	1450
160	47.833	336	202	47.833	425	244	48.454	506	295	51.684	574	354	51.684	689	392	52.399	752	450	52.399	863	50	19.2	960
		249			314			374			424			509			556			639		14.2	710
		438			554			660			748			898			981			1126		25.9	1450
160	55.417	290	202	55.417	366	244	56.136	437	295	59.878	495	354	59.878	594	392	60.706	649	450	60.706	745	56	17.1	960
		215			271			323			366			440			480			551		12.7	710
		395			499			614			696			835			901			1034		23	1450
160	61.438	262	202	61.438	331	244	60.32	407	295	64.341	461	354	64.341	553	392	66.084	596	450	66.084	685	63	15.2	960
		194			244			301			341			409			441			506		11.3	710
		341			431			530			601			721			777			893		20.4	1450
160	71.178	226	202	71.178	285	244	69.882	351	295	74.541	398	354	74.541	477	392	76.561	515	450	76.561	591	71	13.5	960
		167			211			260			294			353			381			437		10	710
		308			389			469			528			634			702			805		18.1	1450
160	78.788	204	202	78.788	258	244	78.976	311	295	84.841	350	354	84.841	419	392	84.746	465	450	84.746	533	80	12	960
		151			191			230			259			310			344			394		8.9	710
		266			336			406			456			551			606			696		16.1	1450
160	91.278	176	202	91.278	222	244	91.496	269	295	97.596	304	354	97.596	365	392	98.182	401	450	98.182	461	90	10.7	960
		130			165			199			225			270			297			341		7.9	710
		252			318			386			438			525			573			658		14.5	1450
160	96.594	167	202	96.594	210	244	95.963	256	295	102.36	290	354	102.36	348	392	103.9	379	450	103.9	435	100	9.6	960
		123			155			189			214			257			281			322		7.1	710
		217			274			333			378			453			495			568		12.9	1450
160	111.91	144	202	111.91	181	244	111.18	221	295	118.59	250	354	118.59	300	392	120.37	327	450	120.37	376	112	8.6	960
		106			134			163			185			222			242			278		6.3	710
		201			254			311			353			423			459			528		11.6	1450
160	120.59	133	202	120.59	168	244	119.12	206	295	127.06	233	354	127.06	280	392	129.41	304	450	129.41	350	125	7.7	960
		99			125			152			173			207			225			256		5.7	710

P

P2N..和P2S..传动能力表：（i=25～125）(续前页)　　P2N.. and P2S..(i=25-125)(continued):

n_1 (r/min)	n_{2N} (r/min)	i_N	P2..23			P2..24			P2..25			P2..26			P2..27			P2..28			P2..29		
			T_{2N} (kN·m)	iex	P_{1N} (kW)	T_{2N} (kN·m)	iex	P_{1N} (kW)	T_{2N} (kN·m)	iex	P_{1N} (kW)	T_{2N} (kN·m)	iex	P_{1N} (kW)	T_{2N} (kN·m)	iex	P_{1N} (kW)	T_{2N} (kN·m)	iex	P_{1N} (kW)	T_{2N} (kN·m)	iex	P_{1N} (kW)
1450	58	25	513	26.872	2899	592	26.872	3345	684	26.872	3865	763	26.872	4312	852	26.622	4860	950	26.622	5419	1060	26.622	6046
960	38.4				1919			2215			2559			2855			3217			3588			4003
710	28.4				1419			1638			1892			2111			2380			2653			2961
1450	51.8	28	513	29.321	2657	592	29.321	3066	684	29.321	3542	763	29.321	3951	852	29.139	4440	950	29.139	4951	1060	29.139	5524
960	34.3				1759			2030			2345			2616			2940			3278			3657
710	25.4				1301			1501			1734			1935			2174			2424			2705
1450	46	31.5	513	32.409	2404	592	32.409	2774	684	32.409	3205	763	32.409	3575	852	32.342	4000	950	32.342	4460	1060	32.342	4977
960	30.5				1591			1836			2122			2367			2648			2953			3295
710	22.5				1177			1358			1569			1750			1959			2184			2437
1450	40.8	35.5	513	36.424	2139	592	36.424	2468	684	36.424	2852	763	36.424	3181	852	36.557	3539	950	36.557	3946	1060	36.557	4403
960	27				1416			1634			1888			2106			2343			2613			2915
710	20				1047			1208			1396			1558			1733			1932			2156
1450	36.3	40	513	41.855	1861	592	41.855	2148	684	41.855	2482	763	41.855	2768	852	42.353	3055	950	42.353	3406	1060	42.353	3800
960	24				1232			1422			1643			1833			2022			2255			2516
710	17.8				911			1052			1215			1355			1496			1668			1861
1450	32.2	45	513	45.373	1717	592	45.373	1981	684	45.373	2289	763	45.373	2554	852	46.948	2756	950	46.948	3073	1060	46.948	3428
960	21.3				1137			1312			1516			1691			1821			2034			2270
710	15.8				841			970			1121			1250			1349			1505			1679
1450	29	50	513	50.993	1528	592	50.993	1763	684	50.993	2037	763	50.993	2272	852	53.067	2438	950	53.067	2718	1060	53.067	3033
960	19.2				1011			1167			1349			1504			1614			1800			2008
710	14.2				748			863			997			1113			1194			1331			1485
1450	25.9	56	513	58.597	1329	592	58.597	1534	684	58.597	1773	763	58.597	1977	852	61.48	2104	950	61.48	2346	1060	61.48	2618
960	17.1				880			1016			1174			1309			1393			1553			1733
710	12.7				651			751			868			968			1030			1149			1282
1450	23	63	513	64.442	1209	592	64.442	1395	684	64.442	1612	763	64.442	1798	852	66.345	1950	950	66.345	2174	1060	66.345	2426
960	15.2				800			924			1067			1190			1291			1440			1606
710	11.3				592			683			789			880			955			1065			1188
1450	20.4	71	513	74.051	1052	592	74.051	1214	684	74.051	1403	763	74.051	1565	852	76.863	1683	950	76.863	1877	1060	76.863	2094
960	13.5				696			804			929			1036			1114			1243			1386
710	10				515			594			687			766			824			919			1025
1450	18.1	80	513	82.781	941	592	82.781	1086	684	82.781	1255	763	82.781	1400	852	84.241	1536	950	84.241	1712	1060	84.241	1911
960	12				623			719			831			927			1017			1134			1265
710	8.9				461			532			614			685			752			838			936
1450	16.1	90	513	95.124	819	592	95.124	945	684	95.124	1092	763	95.124	1218	852	97.596	1326	950	97.596	1478	1060	97.596	1649
960	10.7				542			626			723			806			878			979			1092
710	7.9				401			463			535			596			649			724			808
1450	14.5	100	513	101.6	767	592	101.6	885	684	101.6	1022	763	101.6	1140	852	102.36	1264	950	102.36	1409	1060	102.36	1572
960	9.6				508			586			677			755			837			933			1041
710	7.1				375			433			501			558			619			690			770
1450	12.9	112	513	116.75	667	592	116.75	770	684	116.75	890	763	116.75	992	852	118.59	1091	950	118.59	1216	1060	118.59	1357
960	8.6				442			510			589			657			722			805			899
710	6.3				327			377			436			486			534			596			665
1450	11.6	125	513	125.56	620	592	125.56	716	684	125.56	827	763	125.56	923	852	127.06	1018	950	127.06	1135	1060	127.06	1267
960	7.7				411			474			548			611			674			752			839
710	5.7				304			351			405			452			499			556			620

P2N
P2S

P

P2N

P2..30			P2..31			P2..32			P2..33			P2..34			P2..35			P2..36			i_N	n_{2N} (r/min)	n_1 (r/min)
T_{2N} (kN·m)	iex	P_{1N} (kW)	T_{2N} (kN·m)	iex	P_{1N} (kW)	T_{2N} (kN·m)	iex	P_{1N} (kW)	T_{2N} (kN·m)	iex	P_{1N} (kW)	T_{2N} (kN·m)	iex	P_{1N} (kW)	T_{2N} (kN·m)	iex	P_{1N} (kW)	T_{2N} (kN·m)	iex	P_{1N} (kW)			
		6845			7131			8476			9582			10951			12658			14692		58	1450
1200	26.622	4532	1330	26.872	4766	1500	26.872	5612	1680	26.622	6344	1920	26.622	7251	2240	26.872	8380	2600	26.872	9727	25	38.4	960
		3352			3525			4150			4692			5362			6198			7194		28.4	710
		6253			6732			7768			8755			10005			11601			13465		51.8	1450
1200	29.139	4140	1330	29.321	4500	1500	29.321	5143	1680	29.139	5796	1920	29.139	6624	2240	29.321	7680	2600	29.321	8915	28	34.3	960
		3062			3328			3804			4287			4899			5680			6593		25.4	710
		5634			6091			7028			7888			9015			10495			12182		46	1450
1200	32.342	3730	1330	32.409	4071	1500	32.409	4653	1680	32.342	5222	1920	32.342	5968	2240	32.409	6949	2600	32.409	8065	31.5	30.5	960
		2759			3011			3441			3862			4414			5139			5965		22.5	710
		4984			5420			6253			6974			7975			9338			10839		40.8	1450
1200	36.557	3300	1330	36.424	3622	1500	36.424	4140	1680	36.557	4618	1920	36.557	5280	2240	36.424	6183	2600	36.424	7176	35.5	27	960
		2441			2679			3062			3415			3905			4573			5307		20	710
		4302			4716			5442			6023			6884			8127			9433		36.3	1450
1200	42.353	2848	1330	41.855	3152	1500	41.855	3603	1680	42.353	3988	1920	42.353	4558	2240	41.855	5380	2600	41.855	6245	40	24	960
		2107			2331			2665			2949			3371			3979			4619		17.8	710
		3881			4331			4998			5609			6410			7497			8701		32.2	1450
1200	46.948	2570	1330	45.575	2895	1500	45.575	3309	1680	45.481	3714	1920	45.481	4244	2240	45.373	4963	2600	45.373	5761	45	21.3	960
		1900			2141			2447			2747			3139			3671			4261		15.8	710
		3434			3854			4447			4962			5671			6670			7742		29	1450
1200	53.067	2273	1330	51.221	2576	1500	51.221	2944	1680	51.409	3285	1920	51.409	3755	2240	50.993	4416	2600	50.993	5126	50	19.2	960
		1681			1905			2177			2430			2777			3266			3791		14.2	710
		2964			3354			3870			4283			4895			5805			6738		25.9	1450
1200	61.48	1962	1330	58.858	2242	1500	58.858	2562	1680	59.559	2836	1920	59.559	3241	2240	58.597	3843	2600	58.597	4461	56	17.1	960
		1451			1658			1895			2097			2397			2842			3299		12.7	710
		2747			2986			3446			3845			4394			5188			6022		23	1450
1200	66.345	1818	1330	66.102	1996	1500	66.102	2281	1680	66.345	2546	1920	66.345	2909	2240	65.562	3435	2600	65.562	3987	63	15.2	960
		1345			1476			1687			1883			2152			2540			2949		11.3	710
		2371			2599			2999			3319			3793			4515			5240		20.4	1450
1200	76.863	1570	1330	75.958	1737	1500	75.958	1985	1680	76.863	2197	1920	76.863	2511	2240	75.338	2989	2600	75.338	3470	71	13.5	960
		1161			1285			1468			1625			1857			2211			2566		10	710
		2163			2352			2714			3028			3461			4186			4859		18.1	1450
1200	84.241	1432	1330	83.932	1572	1500	83.932	1797	1680	84.241	2005	1920	84.241	2291	2240	81.252	2772	2600	81.252	3217	80	12	960
		1059			1163			1329			1483			1695			2050			2379		8.9	710
		1867			2047			2362			2614			2987			3643			4228		16.1	1450
1200	97.596	1236	1330	96.448	1368	1500	96.448	1564	1680	97.596	1731	1920	97.596	1978	2240	93.368	2412	2600	93.368	2800	90	10.7	960
		914			1012			1156			1280			1463			1784			2071		7.9	710
		1780			1893			2184			2437			2785			3383			3927		14.5	1450
1200	102.36	1179	1330	104.3	1265	1500	104.3	1446	1680	104.69	1613	1920	104.69	1844	2240	100.53	2240	2600	100.53	2600	100	9.6	960
		872			936			1069			1193			1364			1657			1923		7.1	710
		1537			1646			1899			2103			2404			2944			3418		12.9	1450
1200	118.59	1017	1330	119.96	1100	1500	119.96	1257	1680	121.28	1393	1920	121.28	1592	2240	115.52	1949	2600	115.52	2263	112	8.6	960
		752			813			930			1030			1177			1442			1673		6.3	710
		1434			1548			1786			1976			2259			2633			3056		11.6	1450
1200	127.06	949	1330	127.56	1034	1500	127.56	1182	1680	129.08	1308	1920	129.08	1495	2240	129.2	1743	2600	129.2	2023	125	7.7	960
		702			765			874			968			1106			1289			1496		5.7	710

P

6.2 P3N..和P3S..传动能力表：（i=140～900）

6.2 P3N.. and P3S..(i=140-900):

n_1 (r/min)	n_{2N} (r/min)	i_N	P3..09			P3..10			P3..11			P3..12			P3..13			P3..14		
			T_{2N} (kN·m)	iex	P_{1N} (kW)	T_{2N} (kN·m)	iex	P_{1N} (kW)	T_{2N} (kN·m)	iex	P_{1N} (kW)	T_{2N} (kN·m)	iex	P_{1N} (kW)	T_{2N} (kN·m)	iex	P_{1N} (kW)	T_{2N} (kN·m)	iex	P_{1N} (kW)
1450	10.4				22.8			32.1			43.3			64.1			88.2			124
960	6.9	140	22	146.81	15.1	31	146.81	21.2	42	147.12	28.7	60	142.04	42.5	83	142.94	58.4	117	142.94	82.3
710	5.1				11.1			15.7			21.2			31.4			43.2			60.9
1450	9.1				20.1			28.4			38.6			57.1			78.0			110
960	6.0	160	22	165.95	13.3	31	165.95	18.8	42	165.34	25.5	60	159.64	37.8	83	161.57	51.6	117	161.57	72.8
710	4.4				9.9			13.9			18.9			27.9			38.2			53.8
1450	8.1				17.4			24.5			33.6			49.7			67.3			94.9
960	5.3	180	22	192.25	11.5	31	192.25	16.2	42	189.99	22.2	60	183.44	32.9	83	187.19	44.6	117	187.19	62.8
710	3.9				8.5			12.0			16.4			24.3			33.0			46.5
1450	7.3				15.9			22.4			30.7			45.4			61.5			86.7
960	4.8	200	22	210.43	10.5	31	210.43	14.8	42	207.96	20.3	60	200.79	30.0	83	204.88	40.7	117	204.88	57.4
710	3.6				7.8			11.0			15.0			22.2			30.1			42.5
1450	6.4				14.3			20.2			27.6			40.9			55.4			78.1
960	4.3	225	22	233.57	9.5	31	233.57	13.3	42	230.82	18.3	60	222.86	27.1	83	227.41	36.7	117	227.41	51.7
710	3.2				7.0			9.9			13.5			20.0			27.1			38.3
1450	5.8				12.7			17.8			24.4			36.2			49.0			69.1
960	3.8	250	22	264.01	8.4	31	264.01	11.8	42	260.9	16.2	60	251.90	23.9	83	257.04	32.5	117	257.04	45.8
710	2.8				6.2			8.7			12.0			17.7			24.0			33.8
1450	5.2				10.9			15.4			21.1			31.2			42.3			59.7
960	3.4	280	22	305.86	7.2	31	305.86	10.2	42	302.26	14.0	60	291.84	20.7	83	297.79	28.0	117	297.79	39.5
710	2.5				5.3			7.5			10.3			15.3			20.7			29.2
1450	5.2				11.3			16			21.6			31.9			43.9			61.8
960	3.4	280	22	295.21	7.5	31	295.21	11	42	295.82	14.3	60	285.62	21.1	83	287.42	29.0	117	287.42	40.9
710	2.5				5.5			7.8			10.6			15.6			21.5			30.3
1450	4.6				10.0			14.1			19.2			28.4			38.8			54.7
960	3.0	315	22	333.68	6.6	31	333.68	9.3	42	332.46	12.7	60	320.99	18.8	83	324.88	25.7	117	324.88	36.2
710	2.3				4.9			6.9			9.4			13.9			19.0			26.8
1450	4.1				8.6			12.2			16.7			24.7			33.5			47.2
960	2.7	355	22	386.58	5.7	31	386.58	8.1	42	382.03	11.1	60	368.86	16.4	83	376.39	22.2	117	376.39	31.3
710	2.0				4.2			6.0			8.2			12.1			16.4			23.1
1450	3.6				8.3			11.7			16.0			23.6			32.3			45.5
960	2.4	400	22	401.07	5.5	31	401.07	7.8	42	399.60	10.6	60	385.82	15.6	83	390.49	21.4	117	390.49	30.1
710	1.8				4.1			5.7			7.8			11.6			15.8			22.3
1450	3.2				7.2			10.1			13.9			20.6			27.9			39.3
960	2.1	450	22	464.65	4.8	31	464.65	6.7	42	459.18	9.2	60	443.35	13.6	83	452.4	18.4	117	452.4	26.0
710	1.6				3.5			5.0			6.8			10.1			13.6			19.2
1450	2.9				6.6			9.2			12.6			18.6			25.4			35.8
960	1.9	500	22	510.01	4.3	31	510.01	6.1	42	508.15	8.3	60	490.62	12.3	83	496.56	16.8	117	496.56	23.7
710	1.4				3.2			4.5			6.1			9.1			12.4			17.5
1450	2.6				5.7			8.0			10.9			16.2			21.9			30.9
960	1.7	560	22	590.87	3.7	31	590.87	5.3	42	583.92	7.2	60	563.78	10.7	83	575.29	14.5	117	575.29	20.4
710	1.3				2.8			3.9			5.3			7.9			10.7			15.1
1450	2.3				5.2			7.3			9.9			14.7			20.0			28.3
960	1.5	630	22	645.65	3.4	31	645.65	4.8	42	643.29	6.6	60	621.11	9.7	83	628.63	13.3	117	628.63	18.7
710	1.1				2.5			3.6			4.9			7.2			9.8			13.8
1450	2.0				4.5			6.3			8.6			12.8			17.3			24.4
960	1.4	710	22	748.01	3.0	31	748.01	4.2	42	739.21	5.7	60	713.72	8.5	83	728.29	11.5	117	728.29	16.2
710	1.0				2.2			3.1			4.2			6.3			8.5			11.9
1450	1.8				4.1			5.8			8.0			11.8			16.0			22.6
960	1.2	800	22	807.55	2.7	31	807.55	3.9	42	798.04	5.3	60	770.53	7.8	83	786.25	10.6	117	786.25	15.0
710	0.9				2.0			2.9			3.9			5.8			7.8			11.1
1450	1.6				3.6			5.0			6.9			10.2			13.8			19.5
960	1.1	900	22	935.57	2.4	31	935.57	3.3	42	924.56	4.6	60	892.68	6.8	83	910.90	9.2	117	910.90	12.9
710	0.8				1.7			2.5			3.4			5.0			6.8			9.6

P3N
P3S

P

P3..16			P3..17			P3..18			P3..19			P3..20			P3..21			P3..22			i_N	n_{2N} (r/min)	n_1 (r/min)
T_{2N} (kN·m)	iex	P_{1N} (kW)	T_{2N} (kN·m)	iex	P_{1N} (kW)	T_{2N} (kN·m)	iex	P_{1N} (kW)	T_{2N} (kN·m)	iex	P_{1N} (kW)	T_{2N} (kN·m)	iex	P_{1N} (kW)	T_{2N} (kN·m)	iex	P_{1N} (kW)	T_{2N} (kN·m)	iex	P_{1N} (kW)			
160	143.08	170	202	143.08	214	244	142.94	259	295	152.47	294	354	152.47	353	392	152.47	390	450	152.47	448	140	10.4	1450
		112			142			172			195			233			258			297		6.9	960
		83			105			127			144			173			191			219		5.1	710
160	161.73	150	202	161.73	190	244	161.57	229	295	172.34	260	354	172.34	312	392	172.34	345	450	172.34	396	160	9.1	1450
		99			126			152			172			207			229			263		6.0	960
		74			93			112			127			153			169			194		4.4	710
160	187.37	130	202	187.37	164	244	187.19	198	295	199.66	224	354	199.66	269	392	199.66	298	450	199.66	342	180	8.1	1450
		86			108			131			149			178			197			227		5.3	960
		63			80			97			110			132			146			168		3.9	710
160	204.45	119	202	204.45	150	244	204.88	181	295	218.54	205	354	218.54	246	392	218.54	272	450	218.54	313	200	7.3	1450
		79			99			120			136			163			180			207		4.8	960
		58			73			89			100			120			133			153		3.6	710
160	225.98	108	202	225.98	136	244	227.41	163	295	242.57	185	354	242.57	222	392	242.57	245	450	242.57	282	225	6.4	1450
		71			90			108			122			147			162			187		4.3	960
		53			66			80			90			109			120			138		3.2	710
160	253.97	96	202	253.97	121	244	257.04	144	295	274.18	163	354	274.18	196	392	274.18	217	450	274.18	249	250	5.8	1450
		63			80			95			108			130			144			165		3.8	960
		47			59			71			80			96			106			122		2.8	710
160	291.84	83	202	291.84	105	244	297.79	124	295	317.65	141	354	317.65	169	392	317.65	187	450	317.65	215	280	5.2	1450
		55			70			82			93			112			124			142		3.4	960
		41			51			61			69			83			92			105		2.5	710
160	268.53	90	202	268.53	114	244	283.53	131	295	302.43	148	354	302.43	178	392	302.43	197	450	302.43	226	280	5.2	1450
		60			76			87			98			118			130			150		3.4	960
		44			56			64			73			87			96			111		2.5	710
160	303.53	80	202	303.53	101	244	320.48	116	295	341.48	131	354	341.48	157	392	341.48	174	450	341.48	200	315	4.6	1450
		53			67			77			87			104			115			132		3.0	960
		39			49			57			64			77			85			98		2.3	710
160	351.65	69	202	351.65	87	244	371.29	100	295	396.04	113	354	396.04	136	392	396.04	150	450	396.04	173	355	4.1	1450
		46			58			66			75			90			100			114		2.7	960
		34			43			49			55			66			74			84		2.0	710
160	396.27	61	202	396.27	77	244	388.27	93	295	414.16	108	354	414.16	130	392	414.16	144	450	414.16	165	400	3.6	1450
		41			51			62			72			86			95			109		2.4	960
		30			38			46			53			64			70			81		1.8	710
160	459.1	53	202	459.1	67	244	449.83	81	295	479.82	93	354	479.82	112	392	479.82	124	450	479.82	142	450	3.2	1450
		35			44			53			62			74			82			94		2.1	960
		26			33			40			46			55			61			70		1.6	710
160	508.18	48	202	508.18	60	244	510.30	73	295	544.32	82	354	544.32	99	392	544.32	109	450	544.32	126	500	2.9	1450
		32			40			48			54			65			72			83		1.9	960
		23			30			36			40			48			54			61		1.4	710
160	588.75	41	202	588.75	52	244	591.20	63	295	630.61	71	354	630.61	85	392	630.61	94	450	630.61	108	560	2.6	1450
		27			34			42			47			56			62			72		1.7	960
		20			26			31			35			42			46			53		1.3	710
160	623.03	39	202	623.03	49	244	621.23	59	295	662.65	68	354	662.65	81	392	662.65	90	450	662.65	103	630	2.3	1450
		26			33			39			45			54			59			68		1.5	960
		19			24			29			33			40			44			50		1.1	710
160	721.81	34	202	721.81	42	244	719.72	51	295	767.70	58	354	767.70	70	392	767.70	78	450	767.70	89	710	2.0	1450
		22			28			34			39			46			51			59		1.4	960
		16			21			25			29			34			38			44		1.0	710
160	776.02	31	202	776.02	40	244	771.13	48	295	822.54	54	354	822.54	65	392	822.54	72	450	822.54	83	800	1.8	1450
		21			26			32			36			43			48			55		1.2	960
		15			19			23			27			32			35			41		0.9	710
160	891.73	27	202	891.73	34	244	893.38	42	295	952.94	47	354	952.94	56	392	952.94	62	450	952.94	72	900	1.6	1450
		18			23			28			31			37			41			47		1.1	960
		13			17			20			23			28			31			35		0.8	710

P3N
P3S

P

P3N..和P3S..传动能力表：（i=140～900）(续前页)　　P3N.. and P3S..(i=140-900)(continued):

n_1 (r/min)	n_{2N} (r/min)	i_N	P3..23			P3..24			P3..25			P3..26			P3..27			P3..28			P3..29		
			T_{2N} (kN·m)	iex	P_{1N} (kW)	T_{2N} (kN·m)	iex	P_{1N} (kW)	T_{2N} (kN·m)	iex	P_{1N} (kW)	T_{2N} (kN·m)	iex	P_{1N} (kW)	T_{2N} (kN·m)	iex	P_{1N} (kW)	T_{2N} (kN·m)	iex	P_{1N} (kW)	T_{2N} (kN·m)	iex	P_{1N} (kW)
1450	10.4				510			588			680			758			849			946			1056
960	6.9	140	513	152.79	338	592	152.79	390	684	152.79	450	763	152.79	502	852	152.47	562	950	152.47	626	1060	152.47	699
710	5.1				250			288			333			371			415			463			517
1450	9.1				454			524			605			675			751			837			934
960	6.0	160	513	171.71	300	592	171.71	347	684	171.71	400	763	171.71	447	852	172.34	497	950	172.34	554	1060	172.34	618
710	4.4				222			256			296			330			368			410			457
1450	8.1				416			480			526			587			648			723			806
960	5.3	180	513	197.32	275	592	197.32	318	684	197.32	348	763	197.32	389	852	199.66	429	950	199.66	478	1060	199.66	534
710	3.9				204			235			258			288			317			354			395
1450	7.3				361			416			481			536			592			660			737
960	4.8	200	513	215.97	239	592	215.97	276	684	215.97	318	763	215.97	355	852	218.54	392	950	218.54	437	1060	218.54	488
710	3.6				177			204			235			263			290			323			361
1450	6.4				325			375			433			483			533			595			664
960	4.3	225	513	239.71	215	592	239.71	248	684	239.71	287	763	239.71	320	852	242.57	353	950	242.57	394	1060	242.57	439
710	3.2				159			184			212			237			261			291			325
1450	5.8				288			332			383			428			472			526			587
960	3.8	250	513	270.95	190	592	270.95	220	684	270.95	254	763	270.95	283	852	274.18	312	950	274.18	348	1060	274.18	389
710	2.8				141			162			188			209			231			258			287
1450	5.2				248			286			331			369			407			454			507
960	3.4	280	513	313.91	164	592	313.91	190	684	313.91	219	763	313.91	244	852	317.65	270	950	317.65	301	1060	317.65	335
710	2.5				122			140			162			181			199			222			248
1450	5.2				264			304			352			392			437			487			544
960	3.4	280	513	295.28	175	592	295.28	202	684	295.28	233	763	295.28	260	852	296.01	289	950	296.01	323	1060	296.01	360
710	2.5				129			149			172			192			214			239			266
1450	4.6				235			271			313			349			387			431			481
960	3.0	315	513	331.86	155	592	331.86	179	684	331.86	207	763	331.86	231	852	334.59	256	950	334.59	285	1060	334.59	318
710	2.3				115			133			153			171			189			211			236
1450	4.1				204			236			272			304			334			372			415
960	2.7	355	513	381.34	135	592	381.34	156	684	381.34	180	763	381.34	201	852	387.63	221	950	387.63	246	1060	387.63	275
710	2.0				100			115			133			149			163			182			203
1450	3.6				183			211			244			272			311			346			386
960	2.4	400	513	426.24	121	592	426.24	140	684	426.24	161	763	426.24	180	852	416.52	206	950	416.52	229	1060	416.52	256
710	1.8				89			103			119			133			152			170			189
1450	3.2				159			184			212			237			268			299			334
960	2.1	450	513	489.8	105	592	489.8	122	684	489.8	140	763	489.8	157	852	482.56	178	950	482.56	198	1060	482.56	221
710	1.6				78			90			104			116			131			146			163
1450	2.9				143			164			190			212			237			265			295
960	1.9	500	513	546.62	94	592	546.62	109	684	546.6	126	763	546.6	140	852	545.35	157	950	545.35	175	1060	545.35	195
710	1.4				70			81			93			104			116			130			145
1450	2.6				124			143			165			184			205			228			255
960	1.7	560	513	628.12	82	592	628.12	95	684	628.12	109	763	628.12	122	852	631.81	136	950	631.81	151	1060	631.81	169
710	1.3				61			70			81			90			100			112			125
1450	2.3				116			134			155			173			195			218			243
960	1.5	630	513	670.15	77	592	670.15	89	684	670.15	103	763	670.15	114	852	662.65	129	950	662.65	144	1060	662.65	161
710	1.1				57			66			76			85			96			107			119
1450	2.0				101			117			135			150			169			188			210
960	1.4	710	513	770.08	67	592	770.08	77	684	770.08	89	763	770.08	100	852	767.70	112	950	767.70	124	1060	767.70	139
710	1.0				50			57			66			74			83			92			103
1450	1.8				94			108			125			140			157			175			196
960	1.2	800	513	829.8	62	592	829.8	72	684	829.8	83	763	829.8	92	852	822.54	104	950	822.54	116	1060	822.54	130
710	0.9				46			53			61			68			77			86			96
1450	1.6				81			94			108			121			136			151			169
960	1.1	900	513	961.35	54	592	961.35	62	684	961.35	72	763	961.35	80	852	952.94	90	950	952.94	100	1060	952.94	112
710	0.8				40			46			53			59			66			74			83

P3N
P3S

P

P3..30			P3..31			P3..32			P3..33			P3..34			P3..35			P3..36			i_N	n_{2N} (r/min)	n_1 (r/min)
T_{2N} (kN·m)	iex	P_{1N} (kW)	T_{2N} (kN·m)	iex	P_{1N} (kW)	T_{2N} (kN·m)	iex	P_{1N} (kW)	T_{2N} (kN·m)	iex	P_{1N} (kW)	T_{2N} (kN·m)	iex	P_{1N} (kW)	T_{2N} (kN·m)	iex	P_{1N} (kW)	T_{2N} (kN·m)	iex	P_{1N} (kW)			
		1195			1292			1491			1658			1894			2206			2560		10.4	1450
1200	152.47	791	1330	152.79	864	1500	152.79	987	1680	153.90	1097	1920	153.90	1254	2240	154.22	1460	2600	154.22	1695	140	6.9	960
		585			639			730			812			928			1080			1254		5.1	710
		1057			1150			1326			1466			1676			1962			2278		9.1	1450
1200	172.34	700	1330	171.71	768	1500	171.71	878	1680	173.96	971	1920	173.96	1110	2240	173.33	1299	2600	173.33	1508	160	6.0	960
		518			568			650			718			821			961			1115		4.4	710
		913			1000			1154			1266			1447			1708			1982		8.1	1450
1200	199.66	604	1330	197.32	669	1500	197.32	764	1680	201.54	838	1920	201.54	958	2240	199.17	1131	2600	199.17	1312	180	5.3	960
		447			495			565			620			708			836			971		3.9	710
		834			914			1055			1160			1326			1565			1817		7.3	1450
1200	218.54	552	1330	215.97	611	1500	215.97	698	1680	219.91	768	1920	219.91	878	2240	217.32	1036	2600	217.32	1203	200	4.8	960
		408			452			516			568			649			766			890		3.6	710
		751			824			950			1050			1199			1416			1644		6.4	1450
1200	242.57	497	1330	239.71	550	1500	239.71	629	1680	243.07	695	1920	243.07	794	2240	240.21	937	2600	240.21	1088	225	4.3	960
		368			407			465			514			587			693			805		3.2	710
		665			729			841			934			1067			1260			1462		5.8	1450
1200	274.18	440	1330	270.95	487	1500	270.95	557	1680	273.18	618	1920	273.18	707	2240	269.96	834	2600	269.96	968	250	3.8	960
		325			360			412			457			523			617			716		2.8	710
		574			629			726			813			929			1096			1273		5.2	1450
1200	317.65	380	1330	313.91	420	1500	313.91	480	1680	313.91	538	1920	313.91	615	2240	310.22	726	2600	310.22	843	280	3.4	960
		281			311			355			398			455			537			623		2.5	710
		616			656			757			873			998			1162			1349		5.2	1450
1200	296.01	408	1330	300.72	439	1500	300.72	501	1680	292.05	578	1920	292.05	661	2240	292.66	769	2600	292.66	893	280	3.4	960
		301			324			371			428			489			569			661		2.5	710
		545			584			674			773			883			1034			1200		4.6	1450
1200	334.59	361	1330	337.97	390	1500	337.97	446	1680	330.11	512	1920	330.11	585	2240	328.9	685	2600	328.9	795	315	3.0	960
		267			289			330			378			432			506			588		2.3	710
		470			508			586			667			762			900			1045		4.1	1450
1200	387.63	311	1330	388.37	340	1500	388.37	388	1680	382.45	442	1920	382.45	505	2240	377.95	596	2600	377.95	692	355	2.7	960
		230			251			287			327			373			441			511		2.0	710
		437			463			534			611			699			818			950		3.6	1450
1200	416.52	290	1330	426.24	310	1500	426.24	354	1680	417.18	405	1920	417.18	463	2240	415.65	542	2600	415.65	629	400	2.4	960
		214			229			262			299			342			401			465		1.8	710
		378			403			465			528			603			712			827		3.2	1450
1200	482.56	250	1330	489.80	269	1500	489.80	308	1680	483.31	349	1920	483.31	399	2240	477.63	471	2600	477.63	547	450	2.1	960
		185			199			228			258			295			349			405		1.6	710
		334			361			417			476			544			637			739		2.9	1450
1200	545.35	221	1330	546.60	241	1500	546.60	276	1680	535.90	315	1920	535.90	360	2240	533.94	422	2600	533.94	490	500	1.9	960
		164			179			204			233			266			312			362		1.4	710
		288			314			363			411			470			554			643		2.6	1450
1200	631.81	191	1330	628.12	210	1500	628.12	240	1680	620.86	272	1920	620.86	311	2240	613.55	367	2600	613.55	426	560	1.7	960
		141			155			178			201			230			271			315		1.3	710
		275			295			340			388			443			519			602		2.3	1450
1200	662.65	182	1330	670.15	197	1500	670.15	225	1680	657.74	257	1920	657.74	293	2240	655.34	344	2600	655.34	399	630	1.5	960
		135			146			166			190			217			254			295		1.1	710
		237			256			296			335			383			452			524		2.0	1450
1200	767.70	157	1330	770.08	171	1500	770.08	196	1680	762.02	222	1920	762.02	253	2240	753.05	299	2600	753.05	347	710	1.4	960
		116			127			145			164			187			221			257		1.0	710
		222			238			275			311			356			420			487		1.8	1450
1200	822.54	147	1330	827.92	159	1500	827.92	182	1680	819.53	206	1920	819.53	236	2240	809.89	278	2600	809.89	323	800	1.2	960
		108			118			135			152			174			206			239		0.9	710
		191			206			237			271			310			365			424		1.6	1450
1200	952.94	127	1330	959.17	138	1500	959.17	157	1680	941.73	179	1920	941.73	205	2240	930.65	242	2600	930.65	281	900	1.1	960
		94			102			116			133			152			179			208		0.8	710

P3N
P3S

P

6.3 P2L..传动能力表：（i=31.5～100）

6.3 P3L.. (i=31.5-100):

n_1 (r/min)	n_{2N} (r/min)	i_N	P2..09			P2..10			P2..11			P2..12			P2..13		
			T_{2N} (kN·m)	iex	P_{1N} (kW)	T_{2N} (kN·m)	iex	P_{1N} (kW)	T_{2N} (kN·m)	iex	P_{1N} (kW)	T_{2N} (kN·m)	iex	P_{1N} (kW)	T_{2N} (kN·m)	iex	P_{1N} (kW)
1450	46.0	31.5	22	32.5353	103	31	32.5353	145	42	32.8413	194	60	31.7089	287	83	31.6775	398
960	30.5				68			96			129			190			263
710	22.5				50			71			95			141			195
1450	40.8	35.5	22	35.6114	94	31	35.6114	132	42	35.8344	178	60	34.5987	263	83	34.6723	364
960	27.0				62			88			118			174			241
710	20.0				46			65			87			129			178
1450	36.3	40	22	39.5264	85	31	39.5264	119	42	39.6083	161	60	38.2424	238	83	38.4842	327
960	24.0				56			79			107			158			217
710	17.8				41			58			79			117			160
1450	32.2	45	22	43.882	76	31	43.882	107	42	43.4177	147	60	41.9206	217	83	42.1856	299
960	21.3				50			71			97			144			198
710	15.8				37			53			72			106			146
1450	29.0	50	22	50.4204	66	31	50.4204	93	42	50.5248	126	60	48.7826	187	83	49.0910	257
960	19.2				44			62			84			124			170
710	14.2				32			46			62			91			126
1450	25.9	56	22	55.7278	60	31	55.7278	84	42	55.8432	114	60	53.9176	169	83	54.2585	232
960	17.1				40			56			76			112			154
710	12.7				29			41			56			83			114
1450	23.0	63	22	60.4521	55	31	60.4521	78	42	60.5773	105	60	58.4884	156	83	62.3263	202
960	15.2				37			51			70			103			134
710	11.3				27			38			52			76			99
1450	20.4	71	22	69.6115	48	31	69.6115	68	42	69.7557	91	60	67.3503	135	83	67.7761	186
960	13.5				32			45			61			90			123
710	10.0				23			33			45			66			91
1450	18.1	80	22	79.0528	42	31	79.0528	60	42	80.2465	79	60	77.477	118	83	77.968	162
960	12.0				28			39			53			78			107
710	8.9				21			29			39			58			79
1450	16.1	90	22	86.2394	39	31	86.2394	55	42	86.418	74	60	83.438	109	83	83.9656	150
960	10.7				26			36			49			72			99
710	7.9				19			27			36			53			74
1450	14.5	100	22	99.088	34	31	99.088	48	42	99.295	64	60	95.868	95	83	96.476	131
960	9.6				22			31			43			63			86
710	7.1				17			23			31			47			64

P2L

P2..14			P2..16			P2..17			P2..18			P2..19			i_N	n_{2N} (r/min)	n_1 (r/min)
T_{2N} (kN·m)	iex	P_{1N} (kW)	T_{2N} (kN·m)	iex	P_{1N} (kW)	T_{2N} (kN·m)	iex	P_{1N} (kW)	T_{2N} (kN·m)	iex	P_{1N} (kW)	T_{2N} (kN·m)	iex	P_{1N} (kW)			
117	31.6775	561	160	31.4135	773	202	31.4135	976	244	31.4286	1179	295	33.5237	1336	31.5	46.0	1450
		371			512			646			781			885		30.5	960
		275			379			478			577			654		22.5	710
117	34.6723	512	160	34.3835	707	202	34.3835	892	244	34.3999	1077	295	36.6933	1221	35.5	40.8	1450
		339			468			591			713			808		27.0	960
		251			346			437			527			598		20.0	710
117	38.4842	462	160	38.1635	637	202	38.1635	804	244	38.1819	970	295	40.7272	1100	40	36.3	1450
		306			421			532			642			728		24.0	960
		226			312			394			475			539		17.8	710
117	42.1856	421	160	41.834	581	202	41.834	733	244	43.149	859	295	46.0254	973	45	32.2	1450
		279			385			485			569			644		21.3	960
		206			284			359			420			477		15.8	710
117	49.091	362	160	48.6818	499	202	48.6818	630	244	49.091	755	295	52.3636	855	50	29.0	1450
		240			330			417			500			566		19.2	960
		177			244			309			370			419		14.2	710
117	54.2585	327	160	53.8063	452	202	53.8063	570	244	54.8664	674	295	58.524	765	56	25.9	1450
		217			299			377			446			507		17.1	960
		160			221			279			330			375		12.7	710
117	62.3263	285	160	61.8069	393	202	61.8069	496	244	62.3263	594	295	66.4812	674	63	23.0	1450
		189			260			329			394			446		15.2	960
		140			192			243			291			330		11.3	710
117	67.7761	262	160	67.2113	361	202	67.2113	456	244	67.7761	547	295	72.2943	620	71	20.4	1450
		174			239			302			362			410		13.5	960
		128			177			223			268			303		10.0	710
117	77.968	228	160	77.318	314	202	77.318	397	244	77.968	475	295	83.165	539	80	18.1	1450
		151			208			263			315			357		12.0	960
		112			154			194			233			264		8.9	710
117	83.9656	212	160	83.2658	292	202	83.2658	368	244	83.9656	441	295	89.563	500	90	16.1	1450
		140			193			244			292			331		10.7	960
		104			143			180			216			245		7.9	710
117	96.476	184	160	95.671	254	202	95.671	321	244	96.476	384	295	102.906	435	100	14.5	1450
		122			168			212			254			288		9.6	960
		90			124			157			188			213		7.1	710

注：必需采用强制润滑。

Note: Forced lubrication required.

P2L

P2L..传动能力表：（i=31.5～100）(续前页)　　P3L.. (i=31.5-100)(continued):

n_1 (r/min)	n_{2N} (r/min)	i_N	P2..20			P2..21			P2..22			P2..23			P2..24			P2..25		
			T_{2N} (kN·m)	iex	P_{1N} (kW)	T_{2N} (kN·m)	iex	P_{1N} (kW)	T_{2N} (kN·m)	iex	P_{1N} (kW)	T_{2N} (kN·m)	iex	P_{1N} (kW)	T_{2N} (kN·m)	iex	P_{1N} (kW)	T_{2N} (kN·m)	iex	P_{1N} (kW)
1450	46.0	31.5	354	33.5237	1603	392	33.5237	1776	450	33.5237	2038	513	33.8391	2302	592	33.8391	2657	684	33.8391	3069
960	30.5				1062			1176			1350			1524			1759			2032
710	22.5				785			869			998			1127			1301			1503
1450	40.8	35.5	354	36.6933	1465	392	36.6933	1622	450	36.6933	1862	513	36.9231	2110	592	36.9231	2435	684	36.9231	2813
960	27.0				970			1074			1233			1397			1612			1862
710	20.0				717			794			912			1033			1192			1377
1450	36.3	40	354	40.7272	1320	392	40.7272	1462	450	40.7272	1678	513	40.8116	1909	592	40.8116	2203	684	40.8116	2545
960	24.0				874			968			1111			1264			1458			1685
710	17.8				646			716			822			935			1079			1246
1450	32.2	45	354	46.0254	1168	392	46.0254	1293	450	46.0254	1485	513	46.1208	1689	592	46.1208	1949	684	46.1208	2252
960	21.3				773			856			983			1118			1290			1491
710	15.8				572			633			727			827			954			1103
1450	29.0	50	354	52.3636	1027	392	52.3636	1137	450	52.3636	1305	513	52.472	1485	592	52.472	1713	684	52.1365	1979
960	19.2				680			753			864			983			1134			1311
710	14.2				503			557			639			727			839			969
1450	25.9	56	354	58.524	919	392	58.524	1017	450	58.524	1168	513	58.6452	1328	592	58.6452	1533	684	58.6452	1771
960	17.1				608			673			773			879			1015			1173
710	12.7				450			498			572			650			751			867
1450	23.0	63	354	66.4812	809	392	66.4812	895	450	66.4812	1028	513	66.6189	1169	592	66.6189	1349	684	66.6189	1559
960	15.2				535			593			680			774			893			1032
710	11.3				396			438			503			573			661			763
1450	20.4	71	354	72.2943	744	392	72.2943	823	450	72.2943	945	513	72.4441	1075	592	72.4441	1241	684	72.4441	1434
960	13.5				492			545			626			712			822			949
710	10.0				364			403			463			527			608			702
1450	18.1	80	354	83.165	646	392	83.165	716	450	83.165	822	513	83.337	937	592	83.337	1078	684	83.337	1246
960	12.0				428			474			544			620			714			825
710	8.9				316			350			402			459			528			610
1450	16.1	90	354	89.563	600	392	89.563	665	450	89.563	763	513	89.7486	868	592	89.7486	1002	684	89.7486	1157
960	10.7				397			440			505			575			663			766
710	7.9				294			325			374			425			490			567
1450	14.5	100	354	102.904	522	392	102.904	578	450	102.904	664	513	103.1195	755	592	103.1195	872	684	103.1195	1007
960	9.6				346			383			440			500			577			667
710	7.1				256			283			325			370			427			493

注：必需采用强制润滑。　　Note: Forced lubrication required.

P2L

P

P2..26			P2..27			P2..28			P2..29			P2..30			P2..31 ~ P2..36			i_N	n_{2N} (r/min)	n_1 (r/min)
T_{2N} (kN·m)	iex	P_{1N} (kW)	T_{2N} (kN·m)	iex	P_{1N} (kW)	T_{2N} (kN·m)	iex	P_{1N} (kW)	T_{2N} (kN·m)	iex	P_{1N} (kW)	T_{2N} (kN·m)	iex	P_{1N} (kW)	T_{2N} (kN·m)	iex	P_{1N} (kW)			
763	33.8391	3424	852	33.5237	3859	950	33.5237	4303	1060	33.5237	4801	1200	33.5237	5435				31.5	46.0	1450
		2267			2555			2849			3179			3599					30.5	960
		1677			1890			2107			2351			2662					22.5	710
763	36.9231	3138	852	36.6933	3526	950	36.6933	3931	1060	36.6933	4387	1200	36.6933	4966				35.5	40.8	1450
		2077			2334			2603			2904			3288					27.0	960
		1536			1726			1925			2148			2432					20.0	710
763	40.8116	2839	852	40.7272	3177	950	40.7272	3542	1060	40.7272	3952	1200	40.7272	4474				40	36.3	1450
		1880			2103			2345			2617			2962					24.0	960
		1390			1555			1734			1935			2191					17.8	710
763	46.1208	2512	852	46.0254	2811	950	46.0254	3134	1060	46.0254	3497	1200	46.0254	3959				45	32.2	1450
		1663			1861			2075			2315			2621					21.3	960
		1230			1376			1535			1712			1939					15.8	710
763	52.1365	2208	852	52.0288	2471	950	52.0288	2755	1060	52.0288	3074	1200	52.0288	3480	敬请垂询 On repuest.			50	29.0	1450
		1462			1636			1824			2035			2304					19.2	960
		1081			1210			1349			1505			1704					14.2	710
763	58.6452	1976	852	58.524	2211	950	58.524	2465	1060	58.524	2750	1200	58.524	3114				56	25.9	1450
		1308			1464			1632			1821			2061					17.1	960
		967			1082			1207			1347			1525					12.7	710
763	66.6189	1739	852	66.4812	1946	950	66.4812	2170	1060	66.4812	2421	1200	66.4812	2741				63	23.0	1450
		1151			1288			1437			1603			1815					15.2	960
		852			953			1062			1186			1342					11.3	710
763	72.4441	1599	852	72.2943	1790	950	72.2943	1995	1060	72.2943	2226	1200	72.2943	2521				71	20.4	1450
		1059			1185			1321			1474			1669					13.5	960
		783			876			977			1090			1234					10.0	710
763	83.337	1390	852	83.165	1556	950	83.165	1735	1060	83.165	1935	1200	83.165	2191				80	18.1	1450
		920			1030			1148			1281			1451					12.0	960
		680			762			849			948			1073					8.9	710
763	89.7486	1291	852	89.563	1445	950	89.563	1611	1060	89.563	1797	1200	89.563	2035				90	16.1	1450
		855			956			1066			1190			1347					10.7	960
		632			707			789			880			996					7.9	710
763	103.1195	1124	852	102.904	1257	950	102.904	1402	1060	102.904	1564	1200	102.904	1771				100	14.5	1450
		744			832			928			1036			1172					9.6	960
		550			616			686			766			867					7.1	710

注：必需采用强制润滑。

Note: Forced lubrication required.

P2L

6.4 P2K..传动能力表：（i=112～560）

6.4 P2K.. (i=112-560):

n_1 (r/min)	n_{2N} (r/min)	i_N	P2..09			P2..10			P2..11			P2..12			P2..13			P2..14		
			T_{2N} (kN·m)	iex	P_{1N} (kW)	T_{2N} (kN·m)	iex	P_{1N} (kW)	T_{2N} (kN·m)	iex	P_{1N} (kW)	T_{2N} (kN·m)	iex	P_{1N} (kW)	T_{2N} (kN·m)	iex	P_{1N} (kW)	T_{2N} (kN·m)	iex	P_{1N} (kW)
1450	12.9				30			42			57			84			117			165
960	8.6	112	22	111.25	20	31	111.25	28	42	111.83	38	60	107.97	56	83	107.97	77	117	107.76	109
710	6.3				15			21			28			41			57			81
1450	11.6				27			37			51			75			104			146
960	7.7	125	22	125.75	18	31	125.75	25	42	125.68	34	60	121.35	50	83	121.8	69	117	121.8	97
710	5.7				13			18			25			37			51			71
1450	10.4				23			32			44			65			90			126
960	6.9	140	22	145.69	15	31	145.69	21	42	144.42	29	60	139.44	43	83	141.11	60	117	141.11	83
710	5.1				11			16			22			32			44			62
1450	9.1				21			30			41			61			84			118
960	6.0	160	22	157.28	14	31	157.28	20	42	155.27	27	60	149.91	40	83	151.19	56	117	151.19	78
710	4.4				10			15			20			30			41			58
1450	8.1				19			27			37			54			75			106
960	5.3	180	22	175.77	13	31	175.77	18	42	173.52	24	60	167.54	36	83	167.85	50	117	167.85	70
710	3.9				9.3			13			18			27			37			52
1450	7.3				16			23			32			47			65			92
960	4.8	200	22	203.53	11	31	203.53	15	42	200.92	21	60	193.99	31	83	192.86	43	117	192.86	61
710	3.6				8.0			11			16			23			32			45
1450	6.4				15			21			29			43			59			83
960	4.3	225	22	223.22	9.9	31	223.22	14	42	220.36	19	60	212.76	28	83	213.16	39	117	213.16	55
710	3.2				7.3			10			14			21			29			41
1450	5.8				14			19			27			39			55			77
960	3.8	250	22	242.15	9.1	31	242.15	13	42	239.04	18	60	230.8	26	83	231.23	36	117	231.23	51
710	2.8				6.8			10			13			19			27			38
1450	5.2				12			17			23			34			47			67
960	3.4	280	22	278.84	7.9	31	278.84	11	42	275.26	15	60	265.77	23	83	266.26	31	117	266.26	44
710	2.5				5.9			8.3			11			17			23			33
1450	4.5				11			15			20			30			42			59
960	3.0	320	22	316.65	7.0	31	316.65	10	42	312.6	14	60	301.82	20	83	302.38	28	117	302.38	39
710	2.2				5.2			7.3			10			15			20			29
1450	4.0				9.7			14			19			28			38			54
960	2.7	360	22	345.44	6.4	31	345.44	9.0	42	341.01	12	60	329.25	18	83	329.86	25	117	329.86	36
710	2.0				4.7			6.7			9.2			14			19			26
1450	3.6				8.4			12			16			24			33			47
960	2.4	400	22	396.90	5.6	31	396.90	7.9	42	391.83	11	60	378.31	16	83	379.01	22	117	379.01	31
710	1.8				4.1			5.8			8.0			12			16			23
1450	3.2				7.5			11			15			22			30			42
960	2.1	450	22	443.52	5.0	31	443.52	7.0	42	437.85	10	60	422.75	14	83	423.53	20	117	423.53	28
710	1.6				3.7			5.2			7.1			11			15			21
1450	2.9				6.9			10			13.3			20			27			38
960	1.9	500	22	485.10	4.6	31	485.10	6.4	42	478.90	8.8	60	462.38	13	83	462.24	18	117	462.24	25
710	1.4				3.4			4.8			6.5			10			13			19
1450	2.6																			
960	1.7	560	敬请垂询 On request																	
710	1.3																			

P2K

P

P2..16			P2..17			P2..18			P2..19			P2..20			i_N	n_{2N} (r/min)	n_1 (r/min)
T_{2N} (kN·m)	iex	P_{1N} (kW)	T_{2N} (kN·m)	iex	P_{1N} (kW)	T_{2N} (kN·m)	iex	P_{1N} (kW)	T_{2N} (kN·m)	iex	P_{1N} (kW)	T_{2N} (kN·m)	iex	P_{1N} (kW)			
160	108.47	224	202	108.47	283	244	107.76	344	295	114.94	390	354	114.94	468	112	12.9	1450
		148			187			228			258			310		8.6	960
		110			138			168			191			229		6.3	710
160	122.6	198	202	122.6	250	244	121.8	304	295	129.92	345	354	129.92	414	125	11.6	1450
		131			166			201			228			274		7.7	960
		97			123			149			169			203		5.7	710
160	142.04	171	202	142.04	216	244	141.11	263	295	150.52	298	354	150.52	357	140	10.4	1450
		113			143			174			197			236		6.9	960
		84			106			129			146			175		5.1	710
160	153.05	159	202	153.05	200	244	151.19	245	295	161.27	278	354	161.27	333	160	9.1	1450
		105			133			162			184			221		6.0	960
		78			98			120			136			163		4.4	710
160	167.77	145	202	167.77	183	244	165.73	221	295	176.78	253	354	176.78	304	180	8.1	1450
		96			121			146			168			201		5.3	960
		71			90			108			124			149		3.9	710
160	195.23	124	202	195.23	157	244	192.86	192	295	205.71	218	354	205.71	261	200	7.3	1450
		82			104			127			144			173		4.8	960
		61			77			94			107			128		3.6	710
160	215.79	113	202	215.79	142	244	213.16	174	295	227.37	197	354	227.37	236	225	6.4	1450
		75			94			115			130			157		4.3	960
		55			70			85			96			116		3.2	710
160	234.08	104	202	234.08	131	244	244.85	160	295	261.18	172	354	261.18	206	250	5.8	1450
		69			87			106			114			136		3.8	960
		51			64			78			84			101		2.8	710
160	269.55	90	202	269.55	114	244	266.26	139	295	284.01	158	354	284.01	189	280	5.2	1450
		60			75			92			104			125		3.4	960
		44			56			68			77			93		2.5	710
160	309	79	202	309	99	244	305.24	123	295	325.59	138	354	325.59	165	320	4.5	1450
		52			66			81			91			109		3.0	960
		39			49			60			67			81		2.2	710
160	333.93	73	202	333.93	92	244	329.86	112	295	351.86	127	354	351.86	153	360	4.0	1450
		48			61			74			84			101		2.7	960
		36			45			55			62			75		2.0	710
160	383.68	63	202	383.68	80	244	379.01	98	295	404.28	111	354	404.28	133	400	3.6	1450
		42			53			65			73			88		2.4	960
		31			39			48			54			65		1.8	710
160	428.75	57	202	428.75	72	244	423.53	87	295	451.76	99	354	451.77	119	450	3.2	1450
		38			47			58			66			79		2.1	960
		28			35			43			49			58		1.6	710
160	468.95	52	202	468.95	65	244	462.24	80	295	494.12	91	354	494.12	109	500	2.9	1450
		34			43			53			60			72		1.9	960
		25			32			39			44			53		1.4	710
敬请垂询 On request															560	2.6	1450
																1.7	960
																1.3	710

P2K

6.5 P3K..传动能力表：（i=560～4000）

6.5 P3K.. (i=560-4000):

n_1 (r/min)	n_{2N} (r/min)	i_N	P3..09			P3..10			P3..11			P3..12			P3..13		
			T_{2N} (kN·m)	iex	P_{1N} (kW)	T_{2N} (kN·m)	iex	P_{1N} (kW)	T_{2N} (kN·m)	iex	P_{1N} (kW)	T_{2N} (kN·m)	iex	P_{1N} (kW)	T_{2N} (kN·m)	iex	P_{1N} (kW)
1450	2.59	560	22	566.22	5.9	31	566.22	8.3	42	567.4	11.2	60	547.83	16.6	83	551.29	22.9
960	1.71				3.9			5.5			7.4			11.0			15.1
710	1.27				2.9			4.1			5.5			8.1			11.2
1450	2.30	630	22	640.02	5.2	31	640.02	7.4	42	637.68	10.0	60	615.69	14.8	83	623.14	20.2
960	1.52				3.5			4.9			6.6			9.8			13.4
710	1.13				2.6			3.6			4.9			7.2			9.9
1450	2.04	710	22	700.53	4.8	31	700.53	6.7	42	697.96	9.1	60	673.9	13.5	83	682.06	18.5
960	1.35				3.2			4.4			6.0			9.0			12.2
710	1.00				2.3			3.3			4.5			6.6			9.0
1450	1.81	800	22	777.54	4.3	31	777.54	6.1	42	774.7	8.2	60	747.98	12.2	83	757.04	16.6
960	1.20				2.8			4.0			5.5			8.1			11.0
710	0.89				2.1			3.0			4.0			6.0			8.2
1450	1.61	900	22	878.88	3.8	31	878.88	5.4	42	875.66	7.3	60	845.46	10.7	83	855.70	14.7
960	1.07				2.5			3.5			4.8			7.1			9.8
710	0.79				1.9			2.6			3.6			5.2			7.2
1450	1.45	1000	22	982.19	3.4	31	982.19	4.8	42	978.6	6.5	60	944.85	9.6	83	956.3	13.2
960	0.96				2.3			3.2			4.3			6.4			8.7
710	0.71				1.7			2.3			3.2			4.7			6.5
1450	1.29	1120	22	1137.3	2.9	31	1137.3	4.1	42	1133.1	5.6	60	1094	8.3	83	1107.3	11.4
960	0.86				1.9			2.7			3.7			5.5			7.5
710	0.63				1.4			2.0			2.8			4.1			5.6
1450	1.16	1250	22	1247.3	2.7	31	1247.3	3.8	42	1242.8	5.1	60	1199.9	7.6	83	1214.4	10.4
960	0.77				1.8			2.5			3.4			5.0			6.9
710	0.57				1.3			1.8			2.5			3.7			5.1
1450	1.04	1400	22	1351.1	2.5	31	1351.1	3.5	42	1348.1	4.7	60	1301.6	7.0	83	1317.4	9.6
960	0.69				1.6			2.3			3.1			4.6			6.3
710	0.51				1.2			1.7			2.3			3.4			4.7
1450	0.91	1600	22	1558.1	2.1	31	1558.1	3.0	42	1552.4	4.1	60	1498.9	6.1	83	1517	8.3
960	0.60				1.4			2.0			2.7			4.0			5.5
710	0.44				1.0			1.5			2.0			3.0			4.1
1450	0.81	1800	22	1769.4	1.9	31	1769.4	2.7	42	1762.9	3.6	60	1702.1	5.4	83	1722.8	7.3
960	0.53				1.2			1.8			2.4			3.5			4.8
710	0.39				0.9			1.3			1.8			2.6			3.6
1450	0.73	2000	22	1930.3	1.8	31	1930.3	2.5	42	1923.2	3.3	60	1856.9	4.9	83	1879.4	6.7
960	0.48				1.2			1.6			2.2			3.2			4.4
710	0.36				0.9			1.2			1.6			2.4			3.3
1450	0.65	2240	22	2218.92	1.5	31	2218.92	2.1	42	2209.74	2.9	60	2133.53	4.3	83	2159.37	5.8
960	0.43				1.0			1.4			1.9			2.8			3.9
710	0.32				0.7			1.0			1.4			2.1			2.9
1450	0.58	2500	22	2479.56	1.3	31	2479.56	1.9	42	2469.29	2.6	60	2384.14	3.8	83	2413.01	5.2
960	0.38				0.9			1.3			1.7			2.5			3.5
710	0.28				0.7			0.9			1.3			1.9			2.6
1450	0.52	2800	22	2712.01	1.2	31	2712.01	1.7	42	2700.79	2.4	60	2607.65	3.5	83	2639.23	4.8
960	0.34				0.8			1.1			1.6			2.3			3.2
710	0.25				0.6			0.8			1.2			1.7			2.3
1450	0.46	3150	22	3138.19	1.1	31	3138.19	1.5	42	3125.20	2.0	60	3017.42	3.0	83	3053.96	4.1
960	0.30				0.7			1.0			1.4			2.0			2.7
710	0.23				0.5			0.7			1.0			1.5			2.0
1450	0.41	3550	22	3633.91	0.9	31	3633.91	1.3	42	3620.67	1.8	60	3495.81	2.6	83	3538.14	3.6
960	0.27				0.6			0.9			1.2			1.7			2.4
710	0.20				0.5			0.6			0.9			1.3			1.7
1450	0.36	4000	22	4210.03	0.8	31	4210.03	1.1	42	4160.53	1.5	60	4017.07	2.3	83	4099.00	3.1
960	0.24				0.5			0.7			1.0			1.5			2.0
710	0.18				0.4			0.5			0.8			1.1			1.5

P3K

P3..14			P3..16			P3..17			P3..18			P3..19			i_N	n_{2N} (r/min)	n_1 (r/min)
T_{2N} (kN·m)	iex	P_{1N} (kW)	T_{2N} (kN·m)	iex	P_{1N} (kW)	T_{2N} (kN·m)	iex	P_{1N} (kW)	T_{2N} (kN·m)	iex	P_{1N} (kW)	T_{2N} (kN·m)	iex	P_{1N} (kW)			
117	551.29	32.2	160	551.25	44.1	202	551.25	55.6	244	544.28	68.1	295	580.56	77.2	560	2.59	1450
		21.3			29.2			36.8			45.1			51.1		1.71	960
		15.8			21.6			27.2			33.3			37.8		1.27	710
117	623.14	28.5	160	623.09	39.0	202	623.09	49.2	244	615.21	60.2	295	656.22	68.3	630	2.30	1450
		18.9			25.8			32.6			39.9			45.2		1.52	960
		14.0			19.1			24.1			29.5			33.4		1.13	710
117	682.06	26.0	160	679.88	35.7	202	679.88	45.1	244	673.37	55.0	295	718.27	62.4	710	2.04	1450
		17.2			23.7			29.9			36.4			41.3		1.35	960
		12.8			17.5			22.1			26.9			30.5		1.00	710
117	757.04	23.5	160	751.48	32.3	202	751.48	40.8	244	747.4	49.6	295	797.23	56.2	800	1.81	1450
		15.5			21.4			27.0			32.8			37.2		1.20	960
		11.5			15.8			20.0			24.3			27.5		0.89	710
117	855.70	20.8	160	844.56	28.8	202	844.56	36.3	244	844.81	43.9	295	901.13	49.7	900	1.61	1450
		13.7			19.0			24.0			29.0			32.9		1.07	960
		10.2			14.1			17.8			21.5			24.3		0.79	710
117	956.3	18.6	160	943.84	25.7	202	943.84	32.5	244	937.9	39.5	295	1000.4	44.8	1000	1.45	1450
		12.3			17.0			21.5			26.2			29.6		0.96	960
		9.1			12.6			15.9			19.3			21.9		0.71	710
117	1107.3	16.0	160	1092.4	23.6	202	1092.9	29.8	244	1077.6	34.4	295	1149.5	39.0	1120	1.29	1450
		10.6			15.6			19.7			22.8			25.8		0.86	960
		7.9			11.6			14.6			16.8			19.1		0.63	710
117	1214.4	14.6	160	1198.6	20.3	202	1198.6	25.6	244	1191.1	31.1	295	1270.5	35.3	1250	1.16	1450
		9.7			13.4			16.9			20.6			23.3		0.77	960
		7.2			9.9			12.5			15.2			17.3		0.57	710
117	1317.4	13.5	160	1300.2	18.7	202	1300.2	23.6	244	1292.1	28.7	295	1378.2	32.5	1400	1.04	1450
		8.9			12.4			15.6			19.0			21.5		0.69	960
		6.6			9.1			11.6			14.0			15.9		0.51	710
117	1517	11.7	160	1497.3	16.4	202	1497.3	20.7	244	1487.8	24.9	295	1587	28.2	1600	0.91	1450
		7.8			10.9			13.7			16.5			18.7		0.60	960
		5.7			8.0			10.2			12.2			13.8		0.44	710
117	1722.8	10.3	160	1700.3	14.3	202	1700.3	18.0	244	1689.6	21.9	295	1802.3	24.9	1800	0.81	1450
		6.8			9.5			11.9			14.5			16.5		0.53	960
		5.0			7.0			8.8			10.7			12.2		0.39	710
117	1879.4	9.5	160	1854.9	13.1	202	1854.9	16.5	244	1843.2	20.1	295	1966.1	22.8	2000	0.73	1450
		6.3			8.7			10.9			13.3			15.1		0.48	960
		4.6			6.4			8.1			9.8			11.2		0.36	710
117	2159.4	8.2	160	2131.3	11.4	202	2131.3	14.4	244	2117.8	17.5	295	2259.0	19.8	2240	0.65	1450
		5.4			7.5			9.5			11.6			13.1		0.43	960
		4.0			5.6			7.0			8.6			9.7		0.32	710
117	2413.0	7.4	160	2381.6	10.2	202	2381.6	12.9	244	2366.6	15.7	295	2524.4	17.7	2500	0.58	1450
		4.9			6.8			8.5			10.4			11.7		0.38	960
		3.6			5.0			6.3			7.7			8.7		0.28	710
117	2654.0	6.7	160	2604.9	9.3	202	2604.9	11.8	244	2588.4	14.3	295	2761.0	16.2	2800	0.52	1450
		4.5			6.2			7.8			9.5			10.7		0.34	960
		3.3			4.6			5.8			7.0			7.9		0.25	710
117	3054.0	5.8	160	3014.2	8.1	202	3014.2	10.2	244	2995.2	12.4	295	3194.9	14.0	3150	0.46	1450
		3.9			5.3			6.7			8.2			9.3		0.30	960
		2.8			3.9			5.0			6.1			6.9		0.23	710
117	3538.1	5.0	160	3463.7	7.0	202	3463.7	8.9	244	3470.1	10.7	295	3701.4	12.1	3550	0.41	1450
		3.3			4.6			5.9			7.1			8.0		0.27	960
		2.5			3.4			4.3			5.2			5.9		0.20	710
117	4099.0	4.3	160	4012.7	6.1	202	4012.7	7.6	244	4020.2	9.2	295	4288.2	10.4	4000	0.36	1450
		2.9			4.0			5.1			6.1			6.9		0.24	960
		2.1			3.0			3.7			4.5			5.1		0.18	710

P3K

P3K..传动能力表：（i=560～4000）（续前页）　　P3K.. (i=560-4000)(continued):

n_1 (r/min)	n_{2N} (r/min)	i_N	P3..20			P3..21			P3..22			P3..23			P3..24			P3..25		
			T_{2N} (kN·m)	iex	P_{1N} (kW)	T_{2N} (kN·m)	iex	P_{1N} (kW)	T_{2N} (kN·m)	iex	P_{1N} (kW)	T_{2N} (kN·m)	iex	P_{1N} (kW)	T_{2N} (kN·m)	iex	P_{1N} (kW)	T_{2N} (kN·m)	iex	P_{1N} (kW)
1450	2.59				92.6			103			118			131			151			175
960	1.71	560	354	580.56	61.3	392	580.56	68	450	580.56	78	513	593.88	87	592	593.88	100	684	593.88	116
710	1.27				45.3			50			58			64			74			86
1450	2.30				81.9			91			104			117			135			156
960	1.52	630	354	656.22	54.2	392	656.22	60	450	656.22	69	513	667.44	77	592	667.44	89	684	667.44	103
710	1.13				40.1			44			51			57			66			76
1450	2.04				74.8			83			95			107			123			142
960	1.35	710	354	718.27	49.5	392	718.27	55	450	718.27	63	513	730.55	71	592	730.55	81	684	730.55	94
710	1.00				36.6			41			47			52			60			70
1450	1.81				67.4			75			86			96			111			128
960	1.20	800	354	797.23	44.6	392	797.23	49	450	797.23	57	513	810.87	64	592	810.87	73	684	810.87	85
710	0.89				33.0			37			42			47			54			63
1450	1.61				59.7			66			76			85			98			113
960	1.07	900	354	901.13	39.5	392	901.13	44	450	901.13	50	513	916.54	56	592	916.54	65	684	916.54	75
710	0.79				29.2			32			37			42			48			55
1450	1.45				53.7			60			68			78			89			103
960	0.96	1000	354	1000.4	35.6	392	1000.4	39	450	1000.4	45	513	1004.7	51	592	1004.7	59	684	1004.7	68
710	0.71				26.3			29			33			38			44			51
1450	1.29				46.8			52			59			67			77			89
960	0.86	1120	354	1149.5	31.0	392	1149.5	34	450	1149.5	39	513	1169.1	44	592	1169.1	51	684	1169.1	59
710	0.63				22.9			25			29			33			38			43
1450	1.16				42.3			47			54			60			70			80
960	0.77	1250	354	1270.5	28.0	392	1270.5	31	450	1270.5	36	513	1292.2	40	592	1292.2	46	684	1992.2	53
710	0.57				20.7			23			26			30			34			39
1450	1.04				39.0			43			50			56			64			74
960	0.69	1400	354	1378.2	25.8	392	1378.2	29	450	1378.2	33	513	1401.8	37	592	1401.8	42	684	1401.8	49
710	0.51				19.1			21			24			27			31			36
1450	0.91				33.9			38			43			48			56			64
960	0.60	1600	354	1587	22.4	392	1587	25	450	1587	29	513	1614.2	32	592	1614.2	37	684	1614.2	43
710	0.44				16.6			18			21			24			27			32
1450	0.81				29.8			33			38			42			49			56
960	0.53	1800	354	1802.3	19.7	392	1802.3	22	450	1802.3	25	513	1850.4	28	592	1850.4	32	684	1850.4	37
710	0.39				14.6			16			19			21			24			27
1450	0.73				27.3			30			35			39			45			52
960	0.48	2000	354	1966.1	18.1	392	1966.1	20	450	1966.1	23	513	1999.7	26	592	1999.7	30	684	1999.7	34
710	0.36				13.4			15			17			19			22			25
1450	0.65				23.8			26			30			34			39			45
960	0.43	2240	354	2259.0	15.8	392	2259.0	17	450	2259.0	20	513	2297.7	22	592	2297.7	26	684	2297.7	30
710	0.32				11.7			13			15			17			19			22
1450	0.58				21.3			24			27			30			35			40
960	0.38	2500	354	2524.4	14.1	392	2524.4	16	450	2524.4	18	513	2567.6	20	592	2567.6	23	684	2567.6	27
710	0.28				10.4			12			13			15			17			20
1450	0.52				19.5			21.6			24.7			28			32			37
960	0.34	2800	354	2761.0	12.9	392	2761.0	14.3	450	2761.0	16.4	513	2808.3	18	592	2808.3	21	684	2808.3	24
710	0.25				9.5			10.6			12.1			14			16			18
1450	0.46				16.8			18.6			21.4			24			28			32
960	0.30	3150	354	3194.9	11.1	392	3194.9	12.3	450	3194.9	14.2	513	3249.6	16	592	3249.6	18	684	3249.6	21
710	0.23				8.2			9.1			10.5			12			14			16
1450	0.41				14.5			16.1			18.5			21			24			28
960	0.27	3550	354	3701.4	9.6	392	3701.4	10.6	450	3701.4	12.2	513	3734	14	592	3734	16	684	3734	18
710	0.20				7.1			7.9			9.0			10			12			14
1450	0.36				12.5			13.9			15.9			18			21			24
960	0.24	4000	354	4288.2	8.3	392	4288.2	9.2	450	4288.2	10.5	513	4326.1	12	592	4326.1	14	684	4326.1	16
710	0.18				6.1			6.8			7.8			9			10			12

P3K

P3..26			P3..27			P3..28			P3..29			P3..30			P3..31 ~ P3..36			i_N	n_{2N} (r/min)	n_1 (r/min)
T_{2N} (kN·m)	iex	P_{1N} (kW)	T_{2N} (kN·m)	iex	P_{1N} (kW)	T_{2N} (kN·m)	iex	P_{1N} (kW)	T_{2N} (kN·m)	iex	P_{1N} (kW)	T_{2N} (kN·m)	iex	P_{1N} (kW)	T_{2N} (kN·m)	iex	P_{1N} (kW)			
763	593.88	195	852	580.56	223	950	580.56	248	1060	580.56	277	1200	580.56	314				560	2.59	1450
		129			148			165			184			208					1.71	960
		96			109			122			136			154					1.27	710
763	667.44	174	852	656.22	197	950	656.22	220	1060	656.22	245	1200	656.22	278				630	2.30	1450
		115			131			146			162			184					1.52	960
		85			97			108			120			136					1.13	710
763	730.55	159	852	718.27	180	950	718.27	201	1060	718.27	224	1200	718.27	254				710	2.04	1450
		105			119			133			148			168					1.35	960
		78			88			98			110			124					1.00	710
763	810.87	143	852	797.23	162	950	797.23	181	1060	797.23	202	1200	797.23	229				800	1.81	1450
		95			107			120			134			151					1.20	960
		70			79			89			99			112					0.89	710
763	916.54	126	852	901.13	144	950	901.13	160	1060	901.13	179	1200	901.13	202				900	1.61	1450
		84			95			106			118			134					1.07	960
		62			70			78			87			99					0.79	710
763	1004.7	115	852	987.8	129	950	987.8	144	1060	987.8	161	1200	987.8	182				1000	1.45	1450
		76			86			95			107			121					0.96	960
		56			63			71			79			89					0.71	710
763	1169.1	99	852	1149.5	113	950	1149.5	125	1060	1149.5	140	1200	1149.5	159				1120	1.29	1450
		66			75			83			93			105					0.86	960
		49			55			61			69			78					0.63	710
763	1992.2	90	852	1270.5	102	950	1270.5	114	1060	1270.5	127	1200	1270.5	143				1250	1.16	1450
		59			67			75			84			95					0.77	960
		44			50			56			62			70					0.57	710
763	1401.8	83	852	1459.4	94	950	1459.4	105	1060	1459.4	117	1200	1459.4	132	敬请垂询			1400	1.04	1450
		55			62			69			77			88					0.69	960
		40			46			51			57			65					0.51	710
763	1614.2	72	852	1587	82	950	1587	91	1060	1587	101	1200	1587	115	On request.			1600	0.91	1450
		48			54			60			67			76					0.60	960
		35			40			45			50			56					0.44	710
763	1850.4	63	852	1819.3	72	950	1819.3	80	1060	1819.3	89	1200	1819.3	101				1800	0.81	1450
		41			48			53			59			67					0.53	960
		31			35			39			44			50					0.39	710
763	1999.7	58	852	1966.1	66	950	1966.1	73	1060	1966.1	82	1200	1966.1	93				2000	0.73	1450
		38			44			49			54			61					0.48	960
		28			32			36			40			45					0.36	710
763	2297.7	50	852	2259.0	57	950	2259.0	64	1060	2259.0	71	1200	2259.0	81				2240	0.65	1450
		33			38			42			47			53					0.43	960
		25			28			31			35			39					0.32	710
763	2567.6	45	852	2524.4	51	950	2524.4	57	1060	2524.4	64	1200	2524.4	72				2500	0.58	1450
		30			34			38			42			48					0.38	960
		22			25			28			31			35					0.28	710
763	2808.3	41	852	2761.0	47	950	2761.0	52	1060	2761.0	58	1200	2761.0	66				2800	0.52	1450
		27			31			35			39			44					0.34	960
		20			23			26			29			32					0.25	710
763	3249.6	36	852	3194.9	40	950	3194.9	45	1060	3194.9	50	1200	3194.9	57				3150	0.46	1450
		24			27			30			33			38					0.30	960
		17			20			22			25			28					0.23	710
763	3734	31	852	3701.4	35	950	3701.4	39	1060	3701.4	43	1200	3701.4	49				3550	0.41	1450
		21			23			26			29			33					0.27	960
		15			17			19			21			24					0.20	710
763	4326.1	27	852	4288.2	30	950	4288.2	34	1060	4288.2	38	1200	4288.2	42				4000	0.36	1450
		18			20			22			25			28					0.24	960
		13			15			16			18			21					0.18	710

P3K

P

6.6 P系列额定热容量：

6.6 Nominal Thermal Capacity:

6.6.1 P2N..热容量(安装方位B5):

6.6.1 P2N.. (Mounting position B5):

规格 Size / 风速 Wind velocity PG1	09	10	11	12	13	14	16	17	18	19/20	21/22	23/24	25/26	27/28	29/30	31/32	33/34	35/36
狭小空间安装风速≥0.5m/s Small confined spaces Wind velocity≥0.5m/s	21	26	32	42	49	65	75	92	100	119	142	174	201	242	287	326	366	437
大厅或大车间安装 风速≥1.4m/s Large halls or workshops Wind velocity≥1.4m/s	29	37	45	60	69	92	106	130	147	169	201	246	285	343	406	462	519	619
室外安装 风速≥3.7m/s In the open Wind velocity≥3.7m/s	39	50	60	80	93	125	143	175	191	228	272	333	386	464	505	626	702	838

6.6.2 P2S..热容量(安装方位 B52\B53\B54):

6.6.2 P2S.. (Mounting position B52\B53\B54):

规格 Size / 风速 Wind velocity PG1	09	10	11	12	13	14	16	17	18	19/20	21/22	23/24	25/26	27/28	29/30	31/32	33/34	35/36
狭小空间安装风速≥0.5m/s Small confined spaces Wind velocity≥0.5m/s	15	20	24	32	36	49	56	69	75	89	106	130	151	182	215	245	275	328
大厅或大车间安装 风速≥1.4m/s Large halls or workshops Wind velocity≥1.4m/s	22	28	34	45	52	69	79	97	106	127	151	185	214	257	305	347	389	464
室外安装 风速≥3.7m/s In the open Wind velocity≥3.7m/s	29	38	45	60	70	94	107	132	143	171	204	250	289	348	412	469	527	628

6.6.3 P3N..热容量(安装方位B5):

6.6.3 P3N.. (Mounting position B5):

规格 Size / 风速 Wind velocity PG1	09	10	11	12	13	14	16	17	18	19/20	21/22	23/24	25/26	27/28	29/30	31/32	33/34	35/36
狭小空间安装风速≥0.5m/s Small confined spaces Wind velocity≥0.5m/s	14	18	22	29	34	46	52	64	70	83	99	121	141	169	200	228	256	305
大厅或大车间安装 风速≥1.4m/s Large halls or workshops Wind velocity≥1.4m/s	20	26	31	41	48	64	74	91	99	118	140	172	199	240	284	323	362	432
室外安装 风速≥3.7m/s In the open Wind velocity≥3.7m/s	28	35	42	56	65	87	100	123	133	159	190	233	269	324	384	437	490	585

6.6.4 P3S..热容量(安装方位 B52\B53\B54):

6.6.4 P3S.. (Mounting position B52\B53\B54):

规格 Size / 风速 Wind velocity PG1	09	10	11	12	13	14	16	17	18	19/20	21/22	23/24	25/26	27/28	29/30	31/32	33/34	35/36
狭小空间安装风速≥0.5m/s Small confined spaces Wind velocity≥0.5m/s	12	15	18	24	28	40	43	53	57	69	82	100	116	139	165	188	211	252
大厅或大车间安装 风速≥1.4m/s Large halls or workshops Wind velocity≥1.4m/s	17	21	26	34	40	53	61	75	81	97	116	142	164	197	234	266	298	356
室外安装 风速≥3.7m/s In the open Wind velocity≥3.7m/s	23	29	35	46	54	72	82	101	110	131	156	192	222	267	316	360	404	482

注：其它安装方位热容量,请来电咨询。

Note: Thermal capacity of other mounting positions on request.

6.6.5 P2L..热容量(安装方位 B52\B53\B54):

6.6.5 P2L.. (Mounting position B52\B53\B54):

规格 Size / 风速 Wind velocity / PG1	09	10	11	12	13	14	16	17	18	19/20	21/22	23/24	25/26	27/28	29/30	31 ~ 36
狭小空间安装风速≥0.5m/s Small confined spaces Wind velocity≥0.5m/s	14	18	22	29	34	46	52	64	70	83	99	121	141	169	200	敬请垂询 On request
大厅或大车间安装 风速≥1.4m/s Large halls or workshops Wind velocity≥1.4m/s	20	26	31	41	48	64	74	91	99	118	140	172	199	240	284	
室外安装 风速≥3.7m/s In the open Wind velocity≥3.7m/s	28	35	42	56	65	87	100	123	133	159	190	233	269	324	384	

6.6.6 P2K..热容量(安装方位 B52\B53\B54):

6.6.6 P2K.. (Mounting position B52\B53\B54):

规格 Size / 风速 Wind velocity / PG1	09	10	11	12	13	14	16	17	18	19/20
狭小空间安装风速≥0.5m/s Small confined spaces Wind velocity≥0.5m/s	12	15	18	24	28	38	44	53	58	69
大厅或大车间安装 风速≥1.4m/s Large halls or workshops Wind velocity≥1.4m/s	17	22	26	35	40	54	62	76	82	98
室外安装 风速≥3.7m/s In the open Wind velocity≥3.7m/s	23	29	35	47	54	73	83	102	111	133

6.6.7 P3K..热容量(安装方位 B52\B53\B54):

6.6.7 P3K.. (Mounting position B52\B53\B54):

规格 Size / 风速 Wind velocity / PG1	09	10	11	12	13	14	16	17	18	19/20	21/22	23/24	25/26	27/28	29/30	31 ~ 36
狭小空间安装风速≥0.5m/s Small confined spaces Wind velocity≥0.5m/s	10	12	15	20	23	31	35	43	47	56	67	82	95	109	125	敬请垂询 On request
大厅或大车间安装 风速≥1.4m/s Large halls or workshops Wind velocity≥1.4m/s	14	17	21	28	33	44	50	61	66	79	95	116	106	125	144	
室外安装 风速≥3.7m/s In the open Wind velocity≥3.7m/s	19	24	28	38	44	59	67	83	90	107	128	157	166	195	225	

注：其它安装方位热容量,请来电咨询。

Note: Thermal capacity of other mounting positions on request.

7 输出轴径向力Fr2(N)：

7 Radial force on output shaft:

n_{2N} (r/min)	Fr2 (N)													
	09	10	11	12	13	14	16	17	18	19-20	21-22	23-24	25-26	27-28
56 ~ 71	9538	23353	32518	42407	34737	41183	72297	64454	69713	70477	99136	99347	123583	126071
50 ~ 56	9905	24252	33770	44039	36075	42768	75080	66935	72396	73190	102952	103171	128341	130925
45 ~ 50	10302	25223	35122	45803	37519	44481	78086	69616	75295	76121	107075	107302	133480	136167
40 ~ 45	10720	26249	36550	47665	39044	46289	81261	72446	78356	79215	111428	111665	138907	141703
35.5 ~ 40	11155	27314	38033	49599	40629	48167	84559	75386	81536	82430	115950	116196	144544	147454
31.5 ~ 35.5	11602	28408	39556	51585	42256	50096	87945	78404	84801	85731	120593	120849	150332	153358
28 ~ 31.5	12017	29423	40970	53429	43766	51887	91088	81207	87832	88795	124903	125169	155705	158840
25 ~ 28	12479	30556	42547	55486	45451	53884	94595	84333	91214	92214	129712	129988	161700	164955
22.4 ~ 25	12979	31779	44251	57708	47271	56042	98383	87710	94866	95906	134906	135193	168175	171560
20 ~ 22.4	13507	33071	46050	60054	49193	58320	102382	91276	98723	99805	140390	140689	175011	178534
18 ~ 20	14055	34413	47919	62491	51189	60687	106537	94980	102729	103856	146088	146398	182114	185780
16 ~ 18	14618	35791	49838	64993	53239	63117	110803	98783	106843	108014	151937	152260	189406	193219
14 ~ 16	15140	37071	51619	67316	55142	65373	114764	102314	110662	111875	157368	157703	196176	200125
12.5 ~ 14	15723	38498	53606	69908	57265	67890	119182	106253	114922	116182	163427	163774	203729	207830
11.2 ~ 12.5	16309	39933	55605	72514	59400	70421	123626	110215	119207	120514	169520	169880	211325	215578
≤11.2	16937	41471	57746	75306	61687	73132	128385	114458	123796	125153	176046	176420	219460	223878

备注：各规格更低的输出转速按以上最大的Fr2值。

Note: For lower output speed, apply the largest Fr2 value in each type.

P

8 外形尺寸图表：

8 Outline Dimensions:

8.1 齿轮箱尺寸图：

8.1 Gear unit:

P2NA.. iN = 25 ... 40

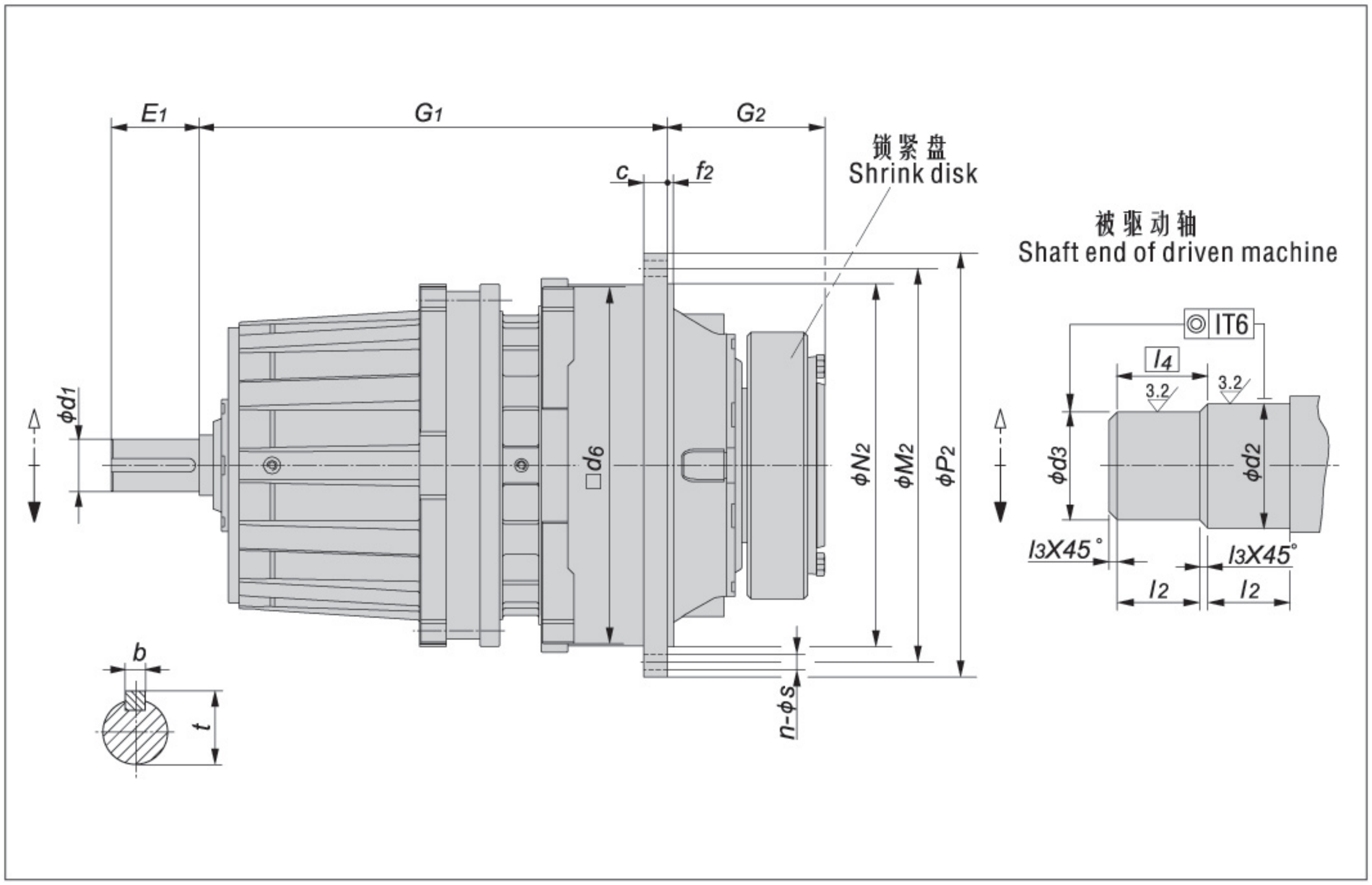

P2NA.. 规格 Size	额定输出扭矩 Nominal output touque T_{2N} (N·m)	输入轴尺寸 Input shaft				c	d2	d3	d6	f2	G1	G2	l2	l3	l4	M2	N2	P2	法兰孔尺寸 Flange bolts		重量* Weight (kg)
		d1	E1	b	t														n	s	
09	22 000	55m6	90	16	59	24	120h6	115h6	356	6±1.5	469	165	65	2.5	67.5	388	350h7	428	24	18	145
10	31 000	55m6	90	16	59	28	130h6	125h6	400	8±1.5	489	174	70	2.5	72.5	436	394h7	472	28	18	195
11	42 000	70m6	120	20	74.5	32	140h6	135h6	436	8±1.5	579	204	82.5	2.5	85.0	485	425h7	525	20	22	280
12	60 000	70m6	120	20	74.5	34	160h6	155h6	510	9±1.5	593	224	90	2.5	92.5	555	495h7	605	20	26	425
13	83 000	80m6	140	22	85	39	180g6	175g6	554	11±1.5	714	241	95	2.5	97.5	595	535h7	645	24	26	540
14	117 000	80m6	140	22	85	42	210g6	205g6	629	9	737	278	105	2.5	107.5	665	610h7	720	32	26	805
16	160 000	95m6	160	25	100	44	230g6	225g6	680	10	851	285	110	2.5	112.5	715	660h7	770	36	26	1030
17	202 000	95m6	160	25	100	50	250g6	245g6	775	10	877	294	120	2.5	122.5	830	750h7	895	24	33	1500
18	244 000	110m6	180	28	116	50	260g6	255g6	815	10	1006	303	120	2.5	122.5	865	785h7	930	32	33	1900
19	295 000	110m6	180	28	116	56	280g6	275g6	870	12	1029.5	327.5	135	2.5	137.5	915	840h7	980	36	33	2000
20	354 000	110m6	180	28	116	56	300g6	295g6	870	12	1029.5	327.5	135	2.5	137.5	915	840h7	980	36	33	2100
21	392 000	120m6	210	32	127	62	310g6	305g6	960	24	1046	354	152	2.5	154.5	1025	935h7	1115	32	39	2650
22	450 000	120m6	210	32	127	62	330g6	325g6	960	24	1046	354	152	2.5	154.5	1025	935h7	1115	32	39	2800
23	513 000	130m6	210	32	137	68	350g6	345g6	1056	28	1150	380	164	2.5	166.5	1120	1025h7	1210	36	39	3450
24	592 000	130m6	210	32	137	68	360g6	355g6	1056	28	1150	380	164	2.5	166.5	1120	1025h7	1210	36	39	3900
25	684 000	140m6	240	36	148	74	380g6	375g6	1150	29	1241	407	180	2.5	182.5	1220	1115h7	1320	36	45	4750
26	763 000	140m6	240	36	148	74	400g6	395g6	1150	29	1241	407	180	2.5	182.5	1220	1115h7	1320	36	45	5150
27	852 000	150m6	240	36	158	81	430g6	425g6	1248	31	1379	453	191	2.5	193.5	1345	1215h7	1460	32	52	6100
28	950 000	150m6	240	36	158	81	450g6	445g6	1248	31	1379	453	191	2.5	193.5	1345	1215h7	1460	32	52	6550
29	1060 000	160m6	270	40	169	87	460g6	450g6	1355	34	1457	483	197.5	5	202.5	1450	1320h7	1565	36	52	7800
30	1200 000	160m6	270	40	169	87	480g6	470g6	1355	34	1457	483	197.5	5	202.5	1450	1320h7	1565	36	52	8300
31	1330 000	170m6	270	40	179	94	480g6	470g6	1443	36	1607	538	232	5	237.0	1545	1400h7	1665	32	62	10200
32	1500 000	170m6	270	40	179	94	510g6	500g6	1443	36	1607	538	232	5	237.0	1545	1400h7	1665	32	62	10700
33	1680 000	180m6	310	40	179	100	530g6	520g6	1536	36	1683	573	242	5	247.0	1635	1495h7	1755	36	62	12350
34	1920 000	180m6	310	45	190	100	570g6	560g6	1536	36	1683	573	242	5	247.0	1635	1495h7	1755	36	62	13150
35	2240 000	190m6	310	45	200	112	600g6	590g6	1720	40	1899	656	272	5	277.0	1825	1685h7	1945	40	62	17300
36	2600 000	190m6	310	45	200	112	640g6	630g6	1720	40	1899	656	272	5	277.0	1825	1685h7	1945	40	62	18400

注：*不包括缩紧盘和润滑油的重量。

Note:*Weight without shrink disk and oil.

P

P2LA..　　i_N = 31.5 ...100

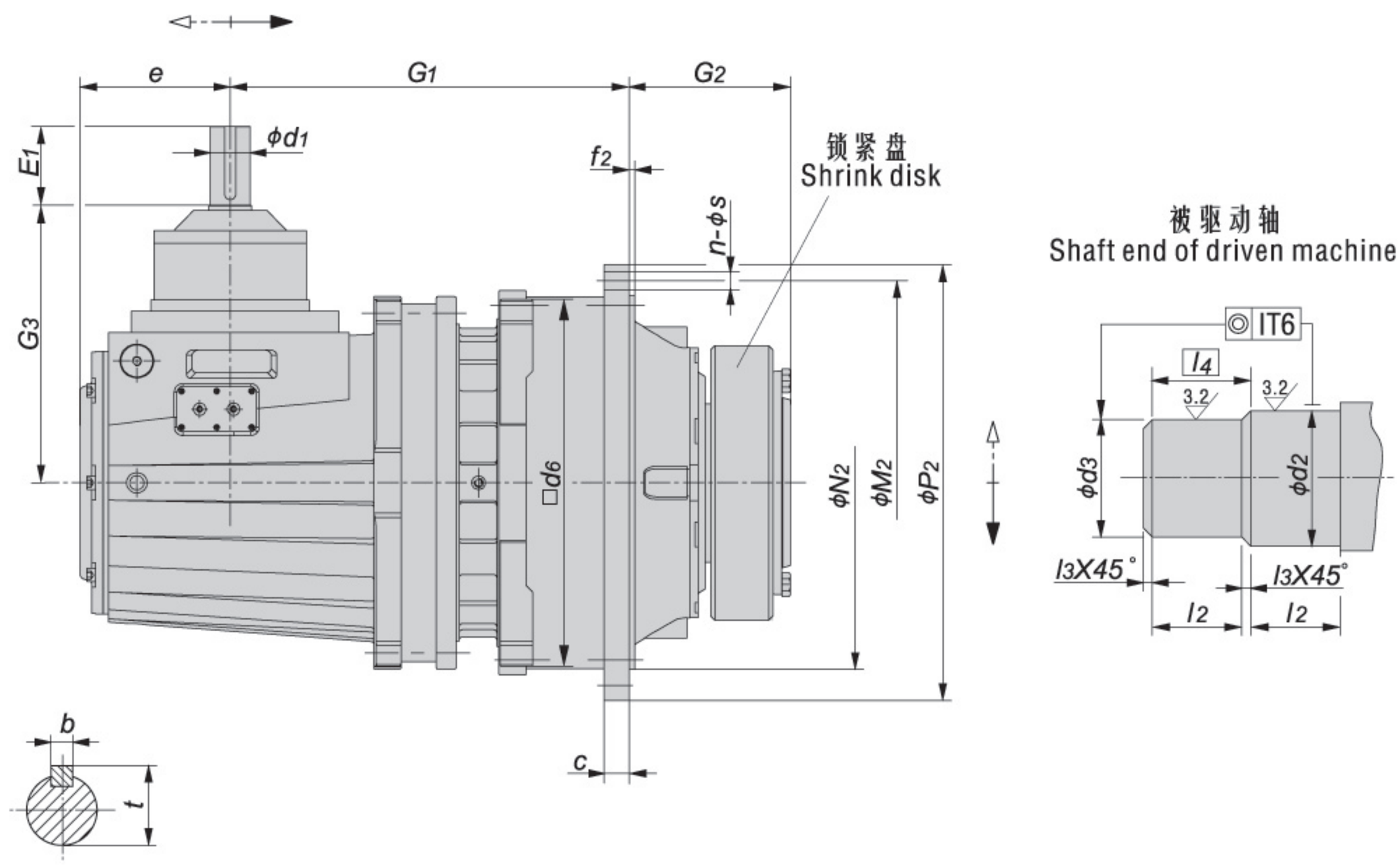

P2LA.. 规格 Size	额定输出扭矩 Nominal output touque T_{2N} (N・m)	输入轴尺寸 Input shaft $i_N \leq 90$ d1	E1	b	t	$i_N \geq 100$ d1	E1	b	t	c	d2	d3	d6	e	f2	G1	G2	G3	l2	l3	l4	M2	N2	P2	法兰孔尺寸 Flange bolts n	s	重量* Weight (kg)
09	22 000	50k6	100	14	53.5	40k6	80	12	43	24	120h6	115h6	356	185	6±1.5	425	165	305	65	2.5	67.5	388	350h7	428	24	18	159
10	31 000	50k6	100	14	53.5	40k6	80	12	43	28	130h6	125h6	400	185	8±1.5	445	174	305	70	2.5	72.5	436	394h7	472	28	18	215
11	42 000	60m6	110	18	64	50k6	100	14	53.5	32	140h6	135h6	436	210	8±1.5	501	204	350	82.5	2.5	85.0	485	425h7	525	20	22	310
12	60 000	60m6	110	18	64	50k6	100	14	53.5	34	160h6	155h6	510	210	9±1.5	515	224	350	90	2.5	92.5	555	495h7	605	20	26	470
13	83 000	75m6	135	20	79.5	60m6	110	18	64	39	180g6	175g6	554	250	11±1.5	619	241	415	95	2.5	97.5	595	535h7	645	24	26	595
14	117 000	75m6	135	20	79.5	60m6	110	18	64	42	210g6	205g6	629	250	9	642	278	415	105	2.5	107.5	665	610h7	720	32	26	890
16	160 000	85m6	165	22	90	70m6	140	20	74.5	44	230g6	225g6	680	295	10	705	285	490	110	2.5	112.5	715	660h7	770	36	26	1137
17	202 000	85m6	165	22	90	70m6	140	20	74.5	50	250g6	245g6	775	295	10	731	294	490	120	2.5	122.5	830	750h7	895	24	33	1660
18	244 000	95m6	165	25	100	75m6	140	20	79.5	50	260g6	255g6	815	350	10	882	303	605	120	2.5	122.5	865	785h7	930	32	33	2100
19	295 000	95m6	165	25	100	75m6	140	20	79.5	56	280g6	275g6	870	350	12	905.5	327.5	605	135	2.5	137.5	915	840h7	980	36	33	2200
20	354 000	95m6	165	25	100	75m6	140	20	79.5	56	300g6	295g6	870	350	12	905.5	327.5	605	135	2.5	137.5	915	840h7	980	36	33	2300
21	392 000	115m6	205	32	122	90m6	170	25	95	62	310g6	305g6	960	400	24	996	354	700	152	2.5	154.5	1025	935h7	1115	32	39	2930
22	450 000	115m6	205	32	122	90m6	170	25	95	62	330g6	325g6	960	400	24	996	354	700	152	2.5	154.5	1025	935h7	1115	32	39	3100
23	513 000	115m6	205	32	122	90m6	170	25	95	68	350g6	345g6	1056	400	28	1055	380	700	164	2.5	166.5	1120	1025h7	1210	36	39	3800
24	592 000	115m6	205	32	122	90m6	170	25	95	68	360g6	355g6	1056	400	28	1055	380	700	164	2.5	166.5	1120	1025h7	1210	36	39	4300
25	684 000	140m6	245	36	148	110m6	210	28	116	74	380g6	375g6	1150	475	29	1138	407	835	180	2.5	182.5	1220	1115h7	1320	36	45	5250
26	763 000	140m6	245	36	148	110m6	210	28	116	74	400g6	395g6	1150	475	29	1138	407	835	180	2.5	182.5	1220	1115h7	1320	36	45	5660
27	852 000	140m6	245	36	148	110m6	210	28	116	81	430g6	425g6	1248	475	31	1272	453	835	191	2.5	193.5	1345	1215h7	1460	32	52	6680
28	950 000	140m6	245	36	148	110m6	210	28	116	81	450g6	445g6	1248	475	31	1272	453	835	191	2.5	193.5	1345	1215h7	1460	32	52	7180
29	1060 000	150m6	245	40	169	115m6	210	32	122	87	460g6	450g6	1355	530	34	1367	483	945	197.5	5	202.5	1450	1320h7	1565	36	52	8500
30	1200 000	150m6	245	40	169	115m6	210	32	122	87	480g6	470g6	1355	530	34	1367	483	945	197.5	5	202.5	1450	1320h7	1565	36	52	9070
31 – 36	敬请垂询 On request																										

注:*不包括缩紧盘和润滑油的重量。　　Note:*Weight without shrink disk and oil.

P

P2SA..

i_N = 45 ... 125

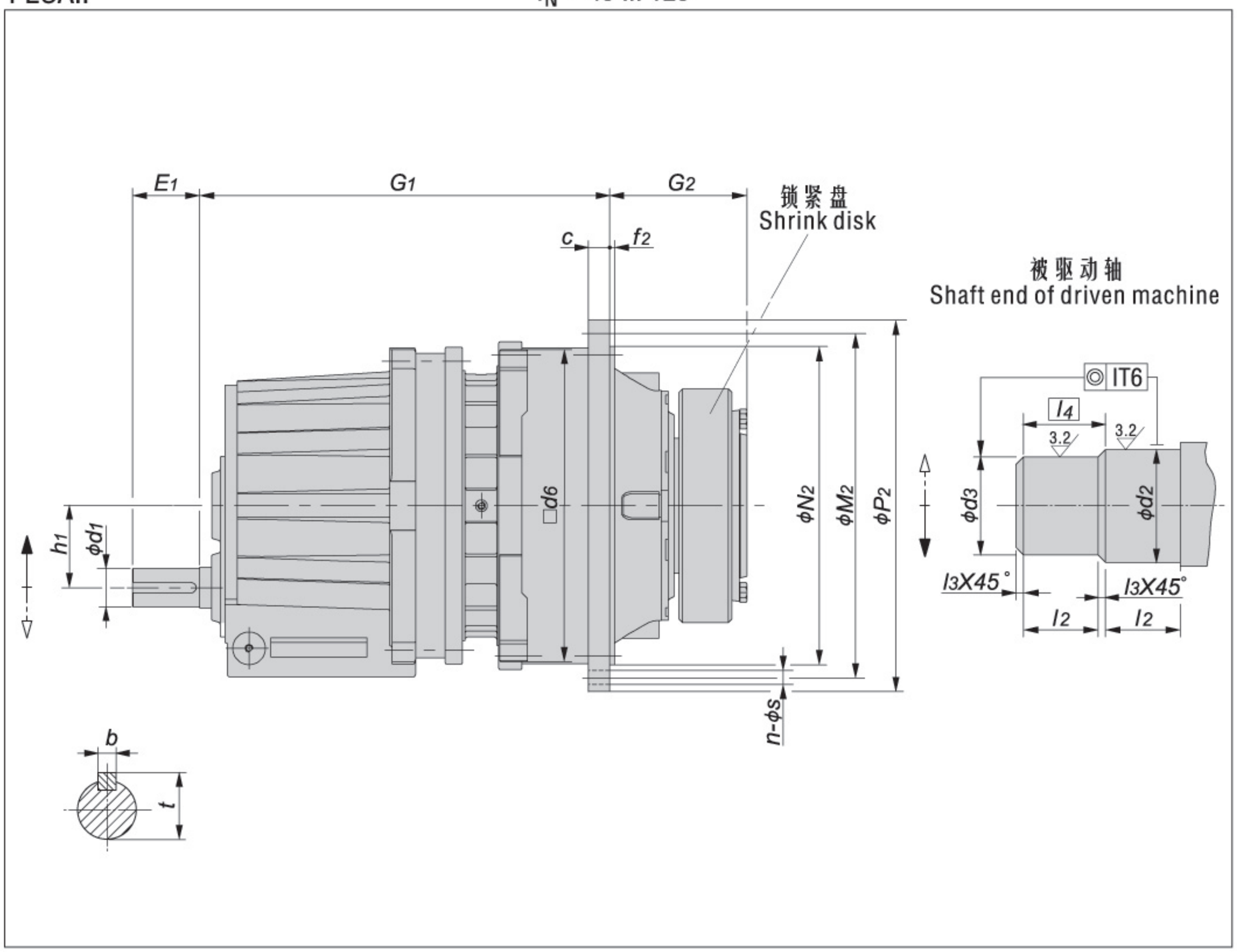

P2SA.. 规格 Size	额定输出扭矩 Nominal output touque T_{2N} (N・m)	输入轴尺寸 Input shaft d1	E1	b	t	c	d2	d3	d6	f2	G1	G2	h1	l2	l3	l4	M2	N2	P2	法兰孔尺寸 Flange bolts n	s	重量* Weight (kg)
09	22 000	38k6	60	10	41	24	120h6	115h6	356	6±1.5	469	165	90	65	2.5	67.5	388	350h7	428	24	18	160
10	31 000	38k6	60	10	41	28	130h6	125h6	400	8±1.5	489	174	90	70	2.5	72.5	436	394h7	472	28	18	220
11	42 000	55m6	90	16	59	32	140h6	135h6	436	8±1.5	579	204	115	82.5	2.5	85.0	485	425h7	525	20	22	310
12	60 000	55m6	90	16	59	34	160h6	155h6	510	9±1.5	593	224	115	90	2.5	92.5	555	495h7	605	20	26	470
13	83 000	70m6	120	20	74.5	39	180g6	175g6	554	11±1.5	714	241	140	95	2.5	97.5	595	535h7	645	24	26	600
14	117 000	70m6	120	20	74.5	42	210g6	205g6	629	9	737	278	140	105	2.5	107.5	665	610h7	720	32	26	900
16	160 000	80m6	140	22	85	44	230g6	225g6	680	10	851	285	170	110	2.5	112.5	715	660h7	770	36	26	1150
17	202 000	80m6	140	22	85	50	250g6	245g6	775	10	877	294	170	120	2.5	122.5	830	750h7	895	24	33	1650
18	244 000	90m6	160	25	95	50	260g6	255g6	815	10	1006	303	200	120	2.5	122.5	865	785h7	930	32	33	1950
19	295 000	90m6	160	25	95	56	280g6	275g6	870	12	1029.5	327.5	200	135	2.5	137.5	915	840h7	980	36	33	2400
20	354 000	90m6	160	25	95	56	300g6	295g6	870	12	1029.5	327.5	200	135	2.5	137.5	915	840h7	980	36	33	2500
21	392 000	100m6	180	28	106	62	310g6	305g6	960	24	1076	354	230	152	2.5	154.5	1025	935h7	1115	32	39	2900
22	450 000	100m6	180	28	106	62	330g6	325g6	960	24	1076	354	230	152	2.5	154.5	1025	935h7	1115	32	39	3100
23	513 000	120m6	210	32	127	68	350g6	345g6	1056	28	1175	380	265	164	2.5	166.5	1120	1025h7	1210	36	39	3800
24	592 000	120m6	210	32	127	68	360g6	355g6	1056	28	1175	380	265	164	2.5	166.5	1120	1025h7	1210	36	39	4100
25	684 000	130m6	210	32	137	74	380g6	375g6	1150	29	1291	407	300	180	2.5	182.5	1220	1115h7	1320	36	45	4950
26	763 000	130m6	210	32	137	74	400g6	395g6	1150	29	1291	407	300	180	2.5	182.5	1220	1115h7	1320	36	45	5350
27	852 000	140m6	240	36	148	81	430g6	425g6	1248	31	1429	453	320	191	2.5	193.5	1345	1215h7	1460	32	52	6800
28	950 000	140m6	240	36	148	81	450g6	445g6	1248	31	1429	453	320	191	2.5	193.5	1345	1215h7	1460	32	52	7200
29	1 060 000	150m6	240	36	158	87	460g6	450g6	1355	34	1507	483	360	197.5	5	202.5	1450	1320h7	1565	36	52	8500
30	1 200 000	150m6	240	36	158	87	480g6	470g6	1355	34	1507	483	360	197.5	5	202.5	1450	1320h7	1565	36	52	9000
31	1 330 000	160m6	270	40	169	94	480g6	470g6	1443	36	1662	538	400	232	5	237.0	1545	1400h7	1665	32	62	10500
32	1 500 000	160m6	270	40	169	94	510g6	500g6	1443	36	1662	538	400	232	5	237.0	1545	1400h7	1665	32	62	11200
33	1 680 000	170m6	270	40	179	100	530g6	520g6	1536	36	1743	573	400	242	5	247.0	1635	1495h7	1755	36	62	12700
34	1 920 000	170m6	270	40	179	100	570g6	560g6	1536	36	1743	573	400	242	5	247.0	1635	1495h7	1755	36	62	13500
35	2 240 000	180m6	310	45	190	112	600g6	590g6	1720	40	1960	656	442	272	5	277.0	1825	1685h7	1945	40	62	17800
36	2 600 000	180m6	310	45	190	112	640g6	630g6	1720	40	1960	656	442	272	5	277.0	1825	1685h7	1945	40	62	18900

注:*不包括缩紧盘和润滑油的重量。

Note:*Weight without shrink disk and oil.

P

P2KA..

i_N = 112 ... 500

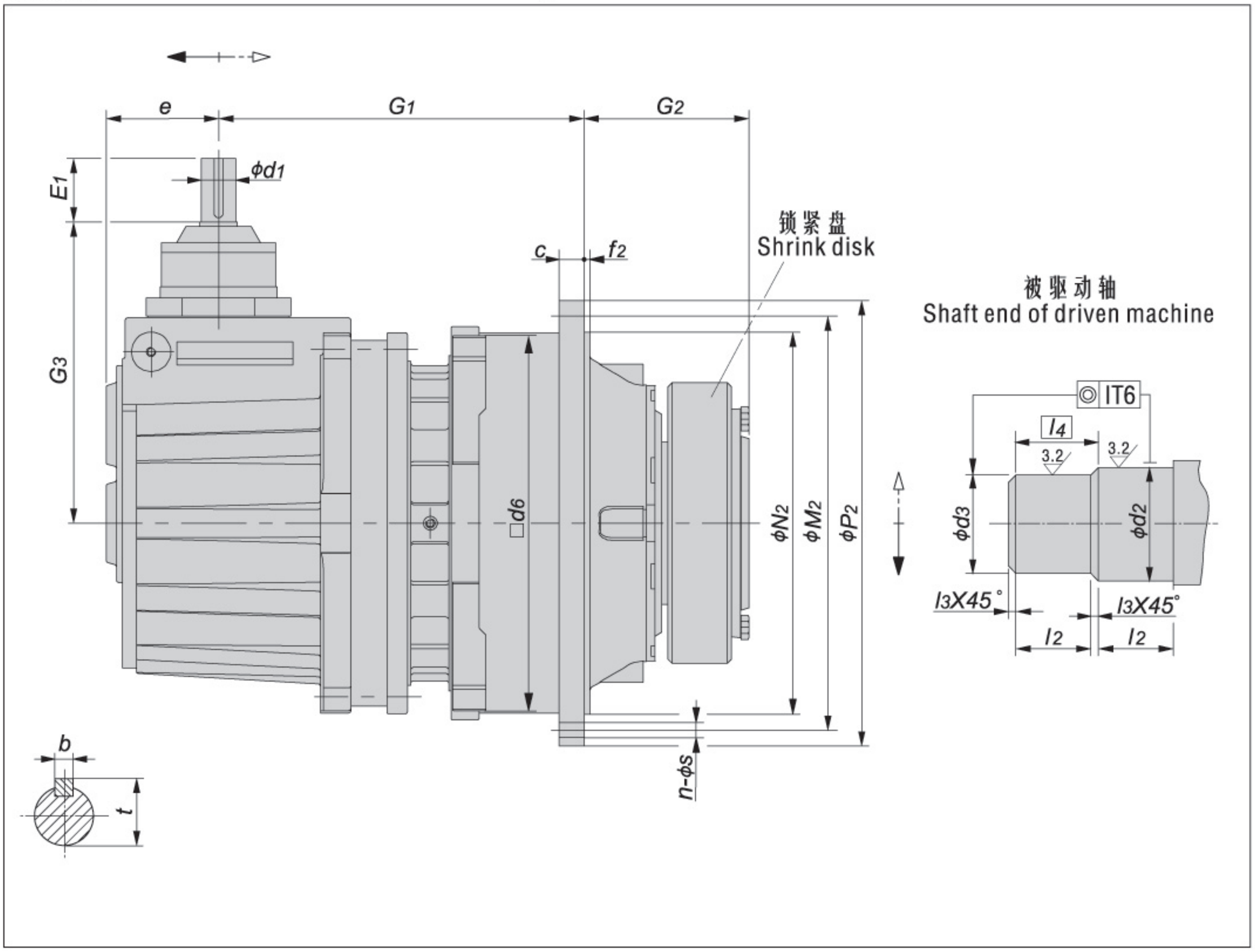

P2KA.. 规格 Size	额定输出扭矩 Nominal output touque T_{2N} (N・m)	输入轴尺寸 Input shaft $i_N \leq 360$ d1	E1	b	t	$i_N \geq 400$ d1	E1	b	t	c	d2	d3	d6	e	f2	G1	G2	G3	l2	l3	l4	M2	N2	P2	法兰孔尺寸 Flange bolts n	s	重量* Weight (kg)
09	22 000	35k6	70	10	38	30k6	60	8	33	24	120h6	115h6	356	119	6±1.5	339	165	320	65	2.5	67.5	388	350h7	428	24	18	165
10	31 000	35k6	70	10	38	30k6	60	8	33	28	130h6	125h6	400	119	8±1.5	359	174	320	70	2.5	72.5	436	394h7	472	28	18	227
11	42 000	45k6	80	14	48.5	35k6	60	10	38	32	140h6	135h6	436	137	8±1.5	419	204	375	82.5	2.5	85	485	425h7	525	20	22	320
12	60 000	45k6	80	14	48.5	35k6	60	10	38	34	160h6	155h6	510	137	9±1.5	433	224	375	90	2.5	92.5	555	495h7	605	20	26	484
13	83 000	50k6	100	14	53.5	40k6	80	12	43	39	180g6	175g6	554	172	11±1.5	518.5	241	445	95	2.5	97.5	595	535h7	645	24	26	618
14	117 000	50k6	100	14	53.5	40k6	80	12	43	42	210g6	205g6	629	172	9	541.5	278	445	105	2.5	107.5	665	610h7	720	32	26	927
16	160 000	60m6	110	18	64	50k6	100	14	53.5	44	230g6	225g6	680	194	10	632	285	520	110	2.5	112.5	715	660h7	770	36	26	1184
17	202 000	60m6	110	18	64	50k6	100	14	53.5	50	250g6	245g6	775	194	10	658	294	520	120	2.5	122.5	830	750h7	895	24	33	1700
18	244 000	75m6	135	20	79.5	60m6	110	18	64	50	260g6	255g6	815	240	10	741.5	303	615	120	2.5	122.5	865	785h7	930	32	33	2010
19	295 000	75m6	135	20	79.5	60m6	110	18	64	56	280g6	275g6	870	240	12	764.5	327.5	615	135	2.5	137.5	915	840h7	980	36	33	2470
20	354 000	75m6	135	20	79.5	60m6	110	18	64	56	300g6	295g6	870	240	12	764.5	327.5	615	135	2.5	137.5	915	840h7	980	36	33	2550
21 – 26	敬请垂询 On request																										

注:*不包括缩紧盘和润滑油的重量。

Note:*Weight without shrink disk and oil.

P

P3NA..

i_N = 140 ... 280

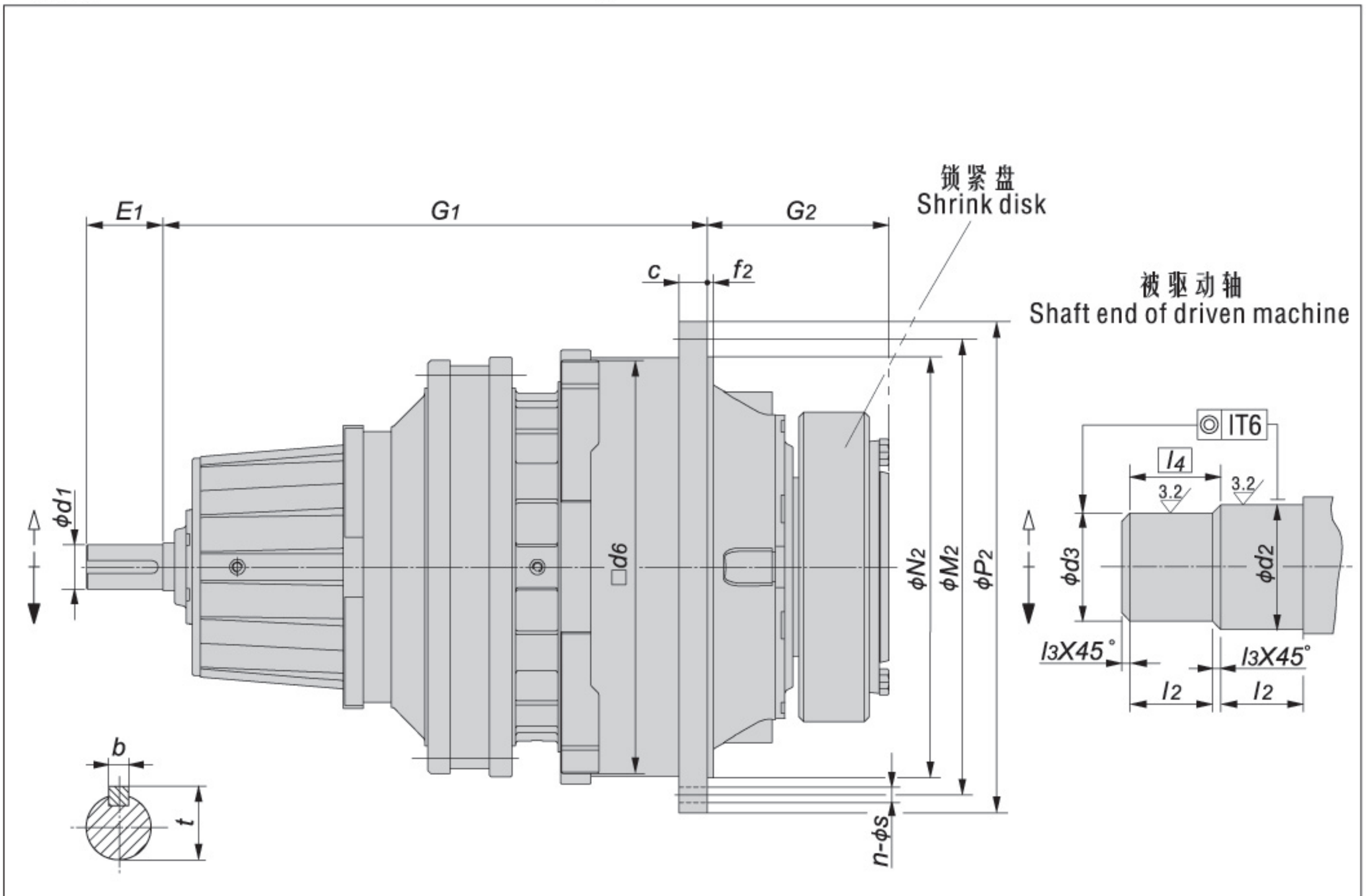

P3NA.. 规格 Size	额定输出扭矩 Nominal output touque T_{2N} (N・m)	输入轴尺寸 Input shaft				c	d2	d3	d6	f2	G1	G2	l2	l3	l4	M2	N2	P2	法兰孔尺寸 Flange bolts		重量* Weight (kg)
		d1	E1	b	t														n	s	
09	22 000	55m6	90	16	59	24	120h6	115h6	356	6±1.5	565	165	65	2.5	67.5	388	350h7	428	24	18	152
10	31 000	55m6	90	16	59	28	130h6	125h6	400	6±1.5	585	174	70	2.5	72.5	436	394h7	472	28	18	205
11	42 000	55m6	90	16	59	32	140h6	135h6	436	8±1.5	616	204	82.5	2.5	85.0	485	425h7	525	20	22	295
12	60 000	55m6	90	16	59	34	160h6	155h6	510	9±1.5	630	224	90	2.5	92.5	555	495h7	605	20	26	447
13	83 000	55m6	90	16	59	39	180g6	175g6	554	11±1.5	688	241	95	2.5	97.5	595	535h7	645	24	26	567
14	117 000	55m6	90	16	59	42	210g6	205g6	629	9	711	278	105	2.5	107.5	665	610h7	720	32	26	850
16	160 000	70m6	120	20	74.5	44	230g6	225g6	680	10	853	285	110	2.5	112.5	715	660h7	770	36	26	1085
17	202 000	70m6	120	20	74.5	50	250g6	245g6	775	10	879	294	120	2.5	122.5	830	750h7	895	24	33	1580
18	244 000	80m6	140	22	85	50	260g6	255g6	815	10	1013.5	303	120	2.5	122.5	865	785h7	930	32	33	2000
19	295 000	80m6	140	22	85	56	280g6	275g6	870	12	1036.5	327.5	135	2.5	137.5	915	840h7	980	36	33	2100
20	354 000	80m6	140	22	85	56	300g6	295g6	870	12	1036.5	327.5	135	2.5	137.5	915	840h7	980	36	33	2200
21	392 000	80m6	140	22	85	62	310g6	305g6	960	24	1093	354	152	2.5	154.5	1025	935h7	1115	32	39	2785
22	450 000	80m6	140	22	85	62	330g6	325g6	960	24	1093	354	152	2.5	154.5	1025	935h7	1115	32	39	2950
23	513 000	95m6	160	25	100	68	350g6	345g6	1056	28	1222	380	164	2.5	166.5	1120	1025h7	1210	36	39	3625
24	592 000	95m6	160	25	100	68	360g6	355g6	1056	28	1222	380	164	2.5	166.5	1120	1025h7	1210	36	39	4100
25	684 000	95m6	160	25	100	74	380g6	375g6	1150	29	1284.5	407	180	2.5	182.5	1220	1115h7	1320	36	45	5000
26	763 000	95m6	160	25	100	74	400g6	395g6	1150	29	1284.5	407	180	2.5	182.5	1220	1115h7	1320	36	45	5400
27	852 000	110m6	180	28	116	81	430g6	425g6	1248	31	1470	453	191	2.5	193.5	1345	1215h7	1460	32	52	6400
28	950 000	110m6	180	28	116	81	450g6	445g6	1248	31	1470	453	191	2.5	193.5	1345	1215h7	1460	32	52	6875
29	1 060 000	110m6	180	28	116	87	460g6	450g6	1355	34	1517	483	197.5	5	202.5	1450	1320h7	1565	36	52	8190
30	1 200 000	110m6	180	28	116	87	480g6	470g6	1355	34	1517	483	197.5	5	202.5	1450	1320h7	1565	36	52	8715
31	1 330 000	120m6	210	32	127	94	480g6	470g6	1433	36	1585	540	232	5	237.0	1545	1400h7	1665	32	62	10700
32	1 500 000	120m6	210	32	127	94	510g6	500g6	1443	36	1585	540	232	5	237.0	1545	1400h7	1665	32	62	11200
33	1 680 000	130m6	210	32	137	100	530g6	520g6	1536	36	1710	573	242	5	247.0	1635	1495h7	1755	36	62	12950
34	1 920 000	130m6	210	32	137	100	570g6	560g6	1536	36	1710	573	242	5	247.0	1635	1495h7	1755	36	62	13800
35–36	敬请垂询 On request																				

注:*不包括缩紧盘和润滑油的重量。

Note:*Weight without shrink disk and oil.

P

P3SA..

i_N = 280 ... 900

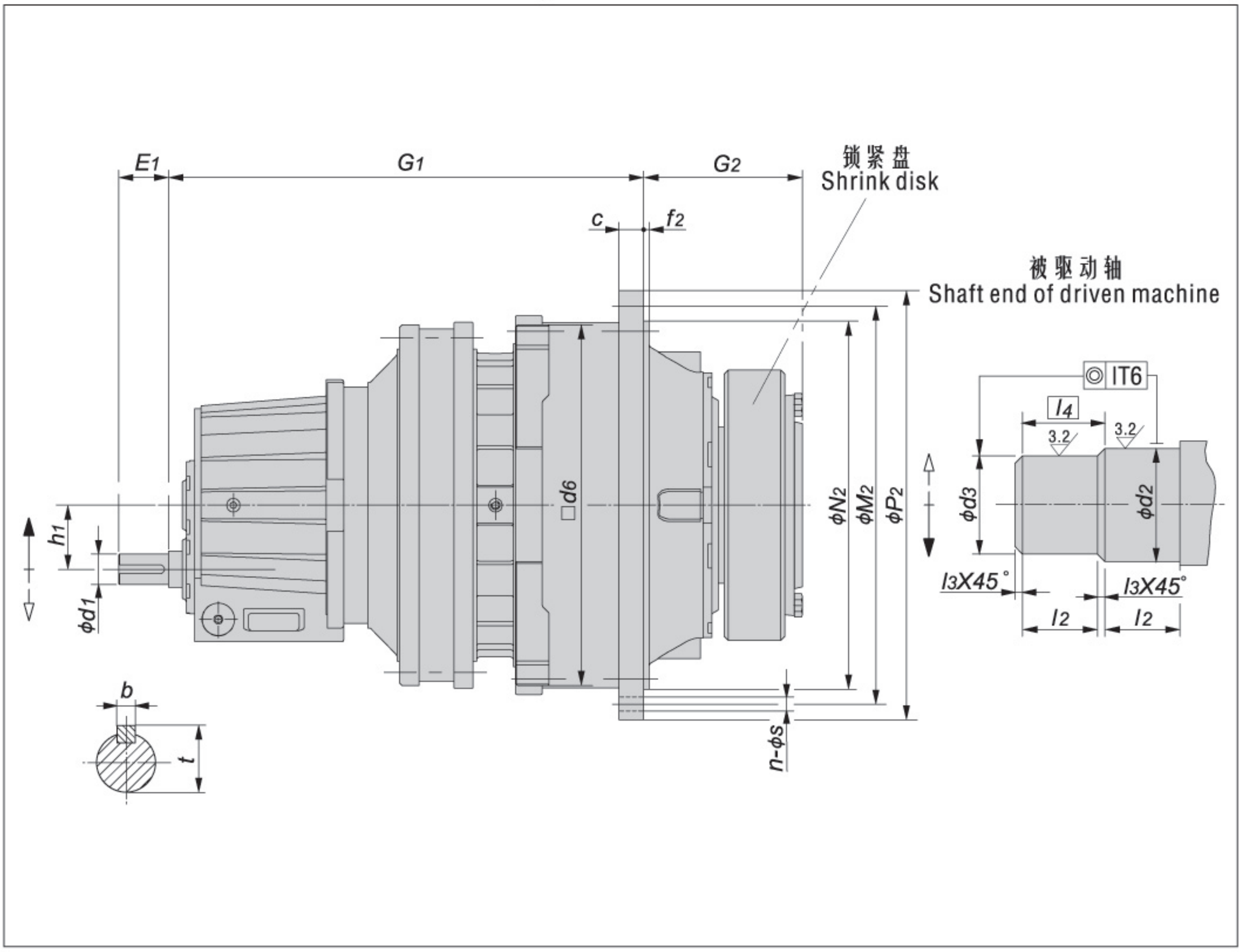

P3SA.. 规格 Size	额定输出扭矩 Nominal output touque T_{2N} (N・m)	输入轴尺寸 Input shaft d1	E1	b	t	c	d2	d3	d6	f2	G1	G2	h1	l2	l3	l4	M2	N2	P2	法兰孔尺寸 Flange bolts n	s	重量* Weight (kg)
09	22 000	38k6	60	10	41	24	120h6	115h6	356	6±1.5	565	165	90	65	2.5	67.5	388	350h7	428	24	18	170
10	31 000	38k6	60	10	41	28	130h6	125h6	400	8±1.5	585	174	90	70	2.5	72.5	436	394h7	472	28	18	230
11	42 000	38k6	60	10	41	32	140h6	135h6	436	8±1.5	616	204	90	82.5	2.5	85.0	485	425h7	525	20	22	310
12	60 000	38k6	60	10	41	34	160h6	155h6	510	9±1.5	630	224	90	90	2.5	92.5	555	495h7	605	20	26	460
13	83 000	38k6	60	10	41	39	180g6	175g6	554	11±1.5	688	241	90	95	2.5	97.5	595	535h7	645	24	26	584
14	117 000	38k6	60	10	41	42	210g6	205g6	629	9	711	278	90	105	2.5	107.5	665	610h7	720	32	26	875
16	160 000	55m6	90	16	59	44	230g6	225g6	680	10	853	285	115	110	2.5	112.5	715	660h7	770	36	26	1115
17	202 000	55m6	90	16	59	50	250g6	245g6	775	10	879	294	115	120	2.5	122.5	830	750h7	895	24	33	1625
18	244 000	70m6	120	20	74.5	50	260g6	255g6	815	10	1013.5	303	140	120	2.5	122.5	865	785h7	930	32	33	2060
19	295 000	70m6	120	20	74.5	56	280g6	275g6	870	12	1036.5	327.5	140	135	2.5	137.5	915	840h7	980	36	33	2160
20	354 000	70m6	120	20	74.5	56	300g6	295g6	870	12	1036.5	327.5	140	135	2.5	137.5	915	840h7	980	36	33	2260
21	392 000	70m6	120	20	74.5	62	310g6	305g6	960	24	1093	354	140	152	2.5	154.5	1025	935h7	1115	32	39	2870
22	450 000	70m6	120	20	74.5	62	330g6	325g6	960	24	1093	354	140	152	2.5	154.5	1025	935h7	1115	32	39	3040
23	513 000	80m6	140	22	85	68	350g6	345g6	1056	28	1222	380	170	164	2.5	166.5	1120	1025h7	1210	36	39	3730
24	592 000	80m6	140	22	85	68	360g6	355g6	1056	28	1222	380	170	164	2.5	166.5	1120	1025h7	1210	36	39	4220
25	684 000	80m6	140	22	85	74	380g6	375g6	1150	29	1284	407	170	180	2.5	182.5	1220	1115h7	1320	36	45	5150
26	763 000	80m6	140	22	85	74	400g6	395g6	1150	29	1284	407	170	180	2.5	182.5	1220	1115h7	1320	36	45	5560
27	852 000	90m6	160	25	95	81	430g6	425g6	1248	31	1470	453	200	191	2.5	193.5	1345	1215h7	1460	32	52	6580
28	950 000	90m6	160	25	95	81	450g6	445g6	1248	31	1470	453	200	191	2.5	193.5	1345	1215h7	1460	32	52	7080
29	1 060 000	90m6	160	25	95	87	460g6	450g6	1355	34	1517	483	200	197.5	5	202.5	1450	1320h7	1565	36	52	8400
30	1 200 000	90m6	160	25	95	87	480g6	470g6	1355	34	1517	483	200	197.5	5	202.5	1450	1320h7	1565	36	52	8970
31	1 330 000	100m6	180	28	106	94	480g6	470g6	1443	36	1617	538	230	232	5	237.0	1545	1400h7	1665	32	62	11000
32	1 500 000	100m6	180	28	106	94	510g6	500g6	1443	36	1617	538	230	232	5	237.0	1545	1400h7	1665	32	62	11500
33	1 680 000	120m6	210	32	127	100	530g6	520g6	1536	36	1735	573	265	242	5	247.0	1635	1495h7	1755	36	62	13300
34	1 920 000	120m6	210	32	127	100	570g6	560g6	1536	36	1735	573	265	242	5	247.0	1635	1495h7	1755	36	62	14200
35–36	敬请垂询 On request																					

注:*不包括缩紧盘和润滑油的重量。

Note:*Weight without shrink disk and oil.

P

P3KA..

i_N = 560 ... 4000

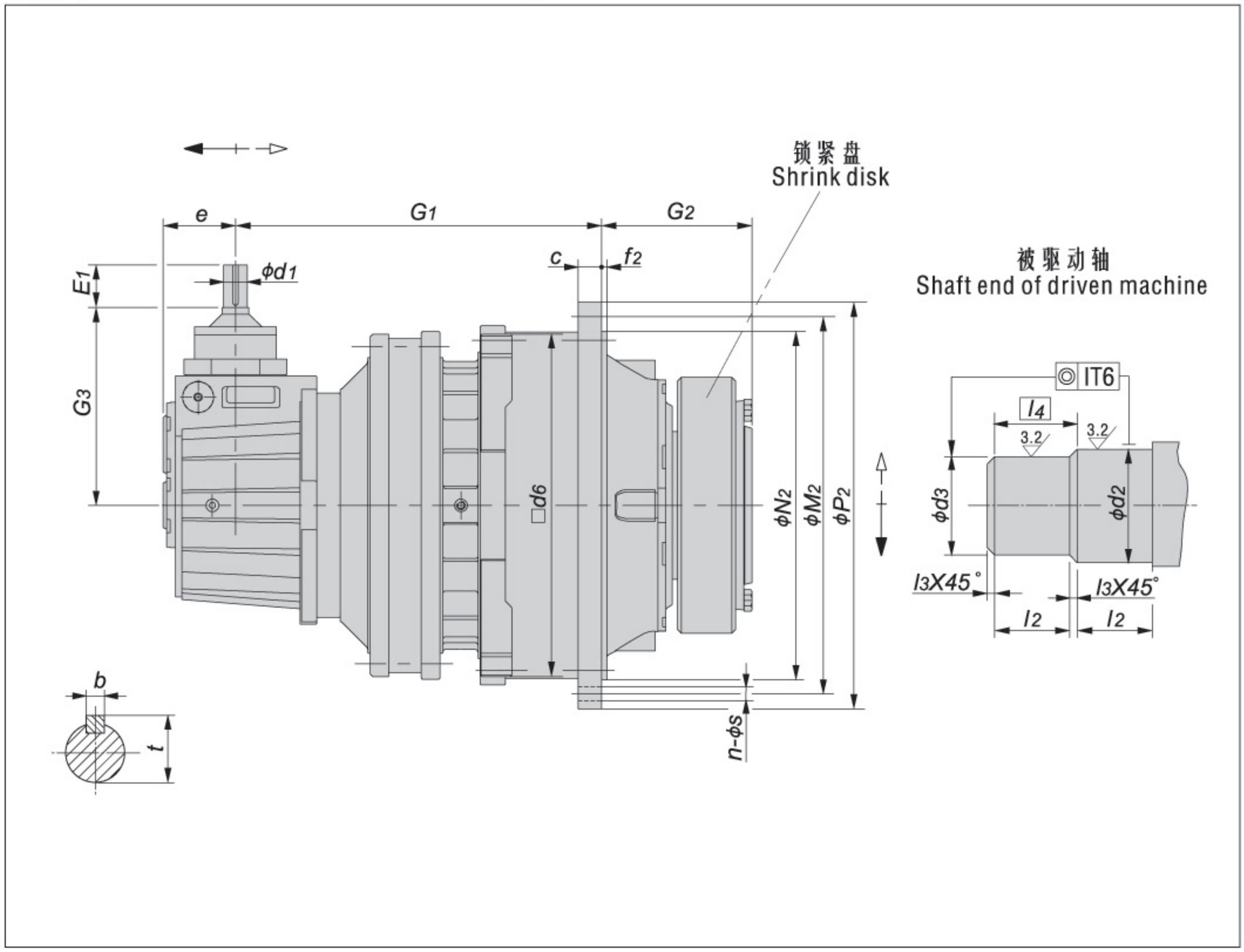

P3KA.. 规格 Size	额定输出扭矩 Nominal output touque T_{2N} (N・m)	输入轴尺寸 Input shaft $i_N \leq 2000$ d1	E1	b	t	$i_N \geq 2240$ d1	E1	b	t	c	d2	d3	d6	e	f2	G1	G2	G3	l2	l3	l4	M2	N2	P2	法兰孔尺寸 Flange bolts n	s	重量* Weight (kg)
09	22 000	35k6	70	10	38	30k6	60	8	33	24	120h6	115h6	356	119	6±1.5	435	165	320	65	2.5	67.5	388	350h7	428	24	18	180
10	31 000	35k6	70	10	38	30k6	60	8	33	28	130h6	125h6	400	119	8±1.5	455	174	320	70	2.5	72.5	436	394h7	472	28	18	240
11	42 000	35k6	70	10	38	30k6	60	8	33	32	140h6	135h6	436	119	8±1.5	486	204	320	82.5	2.5	85	485	425h7	525	20	22	315
12	60 000	35k6	70	10	38	30k6	60	8	33	34	160h6	155h6	510	119	9±1.5	500	224	320	90	2.5	92.5	555	495h7	605	20	26	470
13	83 000	35k6	70	10	38	30k6	60	8	33	39	180g6	175g6	554	119	11±1.5	558	241	320	95	2.5	97.5	595	535h7	645	24	26	595
14	117 000	35k6	70	10	38	30k6	60	8	33	42	210g6	205g6	629	119	9	581	278	320	105	2.5	107.5	665	610h7	720	32	26	890
16	160 000	45k6	80	14	48.5	35k6	60	10	38	44	230g6	225g6	680	137	10	693	285	375	110	2.5	112.5	715	660h7	770	36	26	1137
17	202 000	45k6	80	14	48.5	35k6	60	10	38	50	250g6	245g6	775	137	10	719	294	375	120	2.5	122.5	830	750h7	895	24	33	1660
18	244 000	50k6	100	14	53.5	40k6	80	12	43	50	260g6	255g6	815	172	10	818	303	445	120	2.5	122.5	865	785h7	930	32	33	2100
19	295 000	50k6	100	14	53.5	40k6	80	12	43	56	280g6	275g6	870	172	12	841	327.5	445	135	2.5	137.5	915	840h7	980	36	33	2200
20	354 000	50k6	100	14	53.5	40k6	80	12	43	56	300g6	295g6	870	172	12	841	327.5	445	135	2.5	137.5	915	840h7	980	36	33	2300
21	392 000	50k6	100	14	53.5	40k6	80	12	43	62	310g6	305g6	960	172	24	897.5	354	445	152	2.5	154.5	1025	935h7	1115	32	39	2930
22	450 000	50k6	100	14	53.5	40k6	80	12	43	62	330g6	325g6	960	172	24	897.5	354	445	152	2.5	154.5	1025	935h7	1115	32	39	3100
23	513 000	60m6	110	18	64	50k6	100	14	53.5	68	350g6	345g6	1056	194	28	1003	380	520	164	2.5	166.5	1120	1025h7	1210	36	39	3800
24	592 000	60m6	110	18	64	50k6	100	14	53.5	68	360g6	355g6	1056	194	28	1003	380	520	164	2.5	166.5	1120	1025h7	1210	36	39	4300
25	684 000	60m6	110	18	64	50k6	100	14	53.5	74	380g6	375g6	1150	194	29	1065	407	520	180	2.5	182.5	1220	1115h7	1320	36	45	5250
26	763 000	60m6	110	18	64	50k6	100	14	53.5	74	400g6	395g6	1150	194	29	1065	407	520	180	2.5	182.5	1220	1115h7	1320	36	45	5660
27	852 000	75m6	135	20	79.5	60m6	110	18	64	81	430g6	425g6	1248	240	31	1205.5	453	615	191	2.5	193.5	1345	1215h7	1460	32	52	6680
28	950 000	75m6	135	20	79.5	60m6	110	18	64	81	450g6	445g6	1248	240	31	1205.5	453	615	191	2.5	193.5	1345	1215h7	1460	32	52	7180
29	1 060 000	75m6	135	20	79.5	60m6	110	18	64	87	460g6	450g6	1355	240	34	1252.5	483	615	197.5	5	202.5	1450	1320h7	1565	36	52	8500
30	1 200 000	75m6	135	20	79.5	60m6	110	18	64	87	480g6	470g6	1355	240	34	1252.5	483	615	197.5	5	202.5	1450	1320h7	1565	36	52	9070

注:*不包括缩紧盘和润滑油的重量。

Note:*Weight without shrink disk and oil.

P

8. 2 输出轴尺寸图：

8.2 Dimensions of output shafts:

8.2.1 空心轴:

8.2.1 Hollow shaft:

带锁紧盘的空心输出轴
Hollow shaft with shrink disk

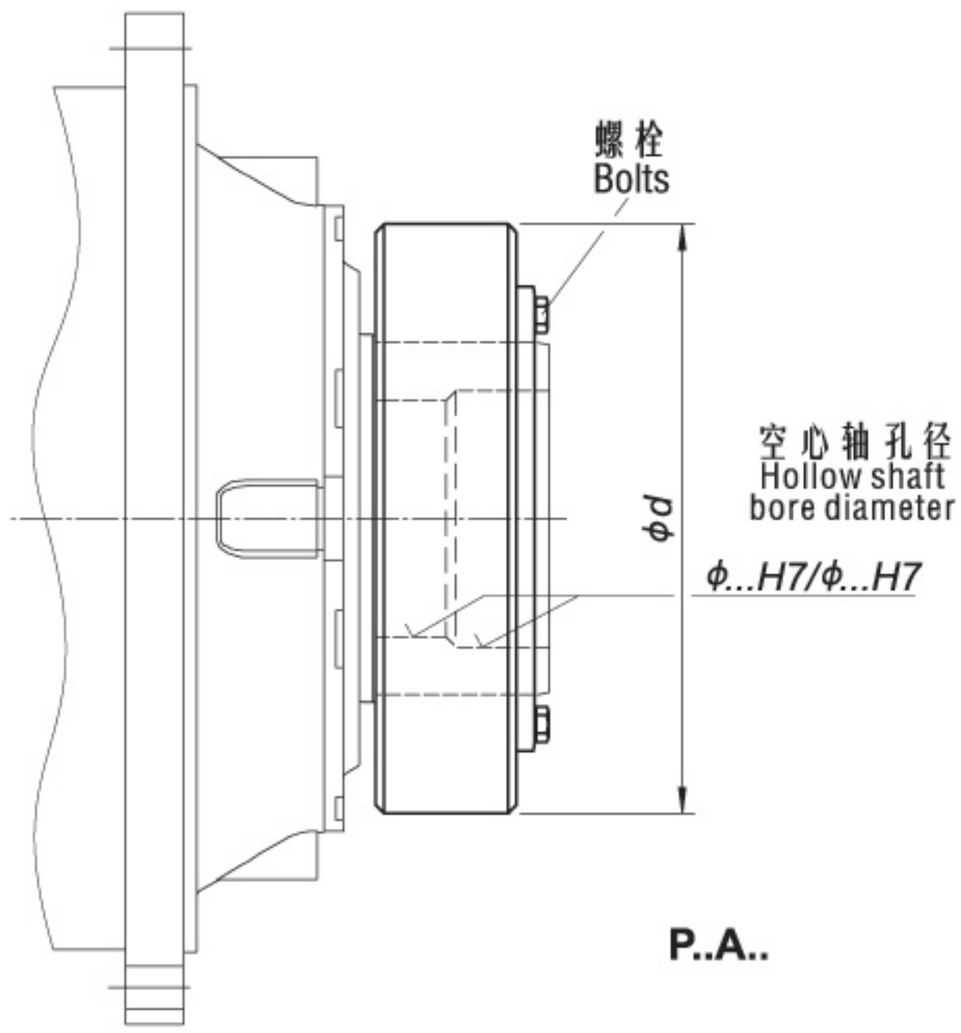

P..A..

渐开线花键空心输出轴
Hollow shaft with involute spline

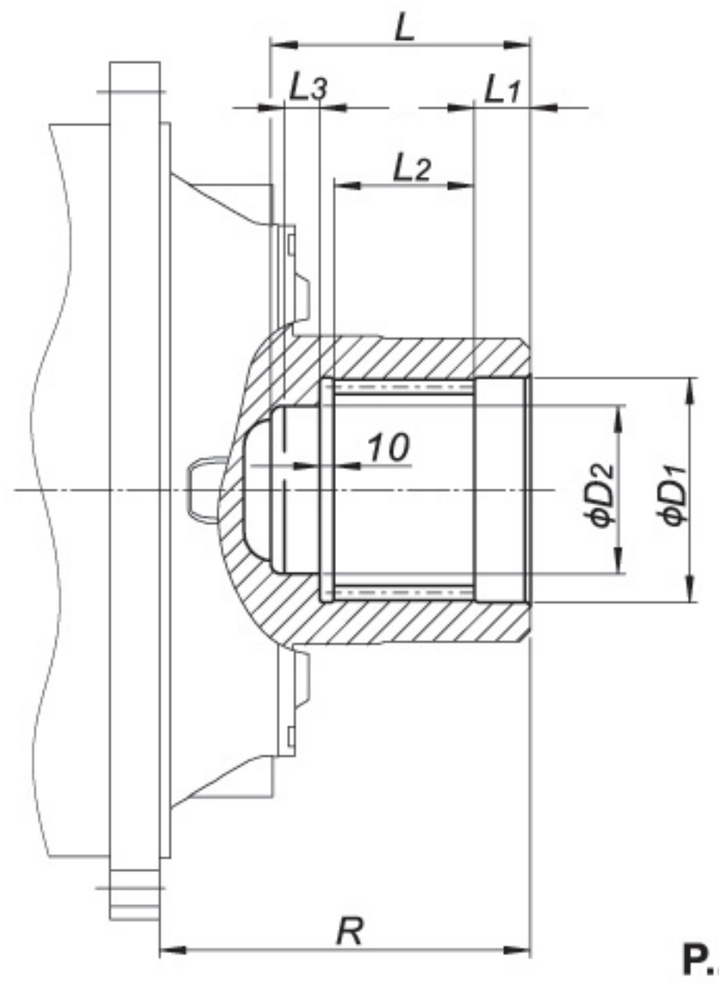

P..C..

花键齿形按DIN5480
Hollow shaft with involute splines acc. to DIN 5480.

规格 Size	额定输出扭矩 Nominal output touque T_{2N} (N · m)	锁紧盘 Shrink disk				空心花键输出轴 Hollow shaft with involute spline							
		型号 Size	d	螺栓 Bolts	重量 Weight (kg)	内花键规格 Internal spline	D_1	D_2	L	L_1	L_2	L_3	R
09	22 000	SP2-155	263	M 12	15.2	N120 x 5 x 30 x 22 x 9H	122H7	107H7	150	40	70	20	165
10	31 000	SP2-165	290	M 16	21.5	N130 x 5 x 30 x 24 x 9H	132H7	117H7	160	40	80	20	174
11	42 000	SP2-185	320	M 16	32.7	N140 x 5 x 30 x 26 x 9H	142H7	125H7	180	45	90	25	204
12	60 000	SP2-220	370	M 16	53	N160 x 5 x 30 x 30 x 9H	162H7	145H7	190	45	100	25	223
13	83 000	SP2-240	405	M 20	66	N180 x 5 x 30 x 34 x 9H	182H7	165H7	200	45	110	25	237
14	117 000	SP2-280	460	M 20	103	N210 x 5 x 30 x 40 x 9H	212H7	195H7	215	45	125	25	264
16	160 000	SP2-300	485	M 20	120	N240 x 8 x 30 x 28 x 9H	242H7	220H7	235	50	140	25	285
17	202 000	SP2-320	520	M 20	138	N250 x 8 x 30 x 30 x 9H	252H7	230H7	250	50	150	30	290
18	244 000	SP2-340	570	M 20	189	N260 x 8 x 30 x 31 x 9H	262H7	240H7	260	50	160	30	303
19	295 000	SP2-360	590	M 20	207	N280 x 8 x 30 x 34 x 9H	282H7	260H7	270	50	170	30	327.5
20	354 000	SP2-380	640	M 24	244	N300 x 8 x 30 x 36 x 9H	302H7	280H7	280	50	180	30	327.5
21	392 000	SP2-390	650	M 24	249	N310 x 8 x 30 x 37 x 9H	312H7	290H7	310	60	190	40	354
22	450 000	SP2-420	670	M 24	285	N330 x 8 x 30 x 40 x 9H	332H7	310H7	320	60	200	40	354
23	513 000	SP2-440	720	M 24	357	N340 x 8 x 30 x 41 x 9H	342H7	320H7	320	60	200	40	348
24	592 000	SP2-460	770	M 24	419	N360 x 8 x 30 x 44 x 9H	362H7	340H7	340	60	220	40	368
25	684 000	SP2-480	800	M 24	492	N380 x 8 x 30 x 46 x 9H	382H7	360H7	350	60	230	40	372
26	763 000	SP2-500	850	M 27	567	N400 x 8 x 30 x 48 x 9H	402H7	380H7	360	60	240	40	382
27	852 000	SP2-530	910	M 27	744	N440 x 8 x 30 x 54 x 9H	442H7	420H7	370	60	250	40	423
28	950 000	SP2-560	940	M 27	776	N450 x 8 x 30 x 55 x 9H	452H7	430H7	385	65	260	40	428
29	1 060 000	SP2-560	940	M 27	736	N460 x 8 x 30 x 56 x 9H	462H7	440H7	400	65	270	45	433
30	1 200 000	SP2-590	960	M 27	845	N480 x 8 x 30 x 58 x 9H	482H7	460H7	415	65	285	45	448
31	1 330 000	SP2-590	960	M 27	835								
32	1 500 000	SP2-620	1020	M 30	1064								
33	1 680 000	SP2-660	1070	M 33	1178								
34	1 920 000	SP2-700	1140	M 33	1345								
35	2 240 000	SP2-750	1150	M 33	1346								
36	2 600 000	SP2-800	1230	M 33	1646								

8.2.2 实心轴:

带平键的实心输出轴
Solid shaft with parallel keys

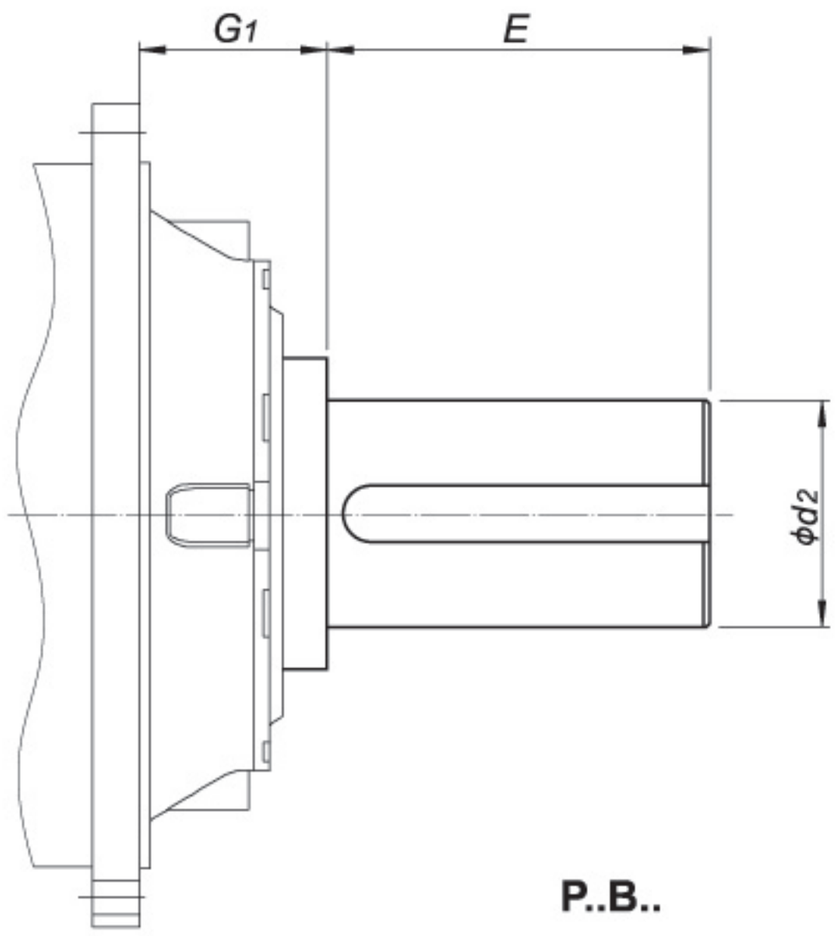

8.2.2 Solid shaft:

渐开线花键实心输出轴
Solid shaft with involute splines

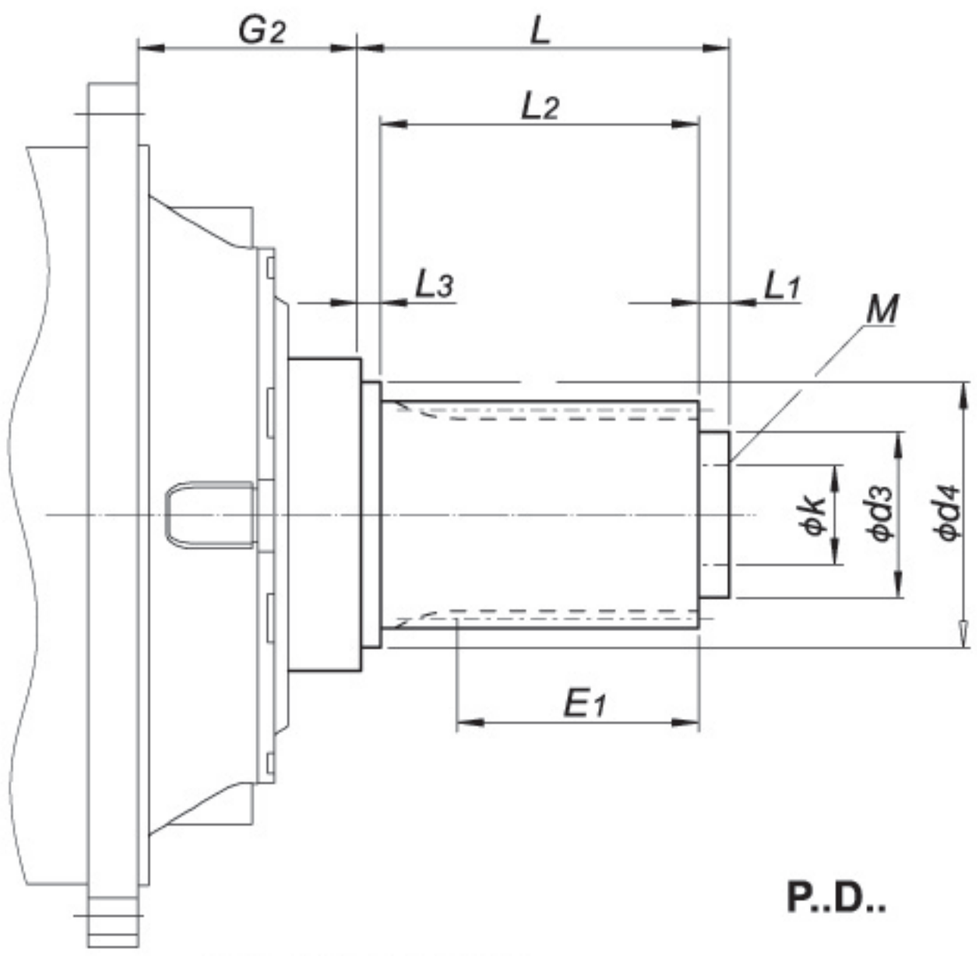

花键齿形按DIN5480
Hollow shaft with involute splines acc. to DIN 5480.

规格 Size	额定输出扭矩 Nominal out-put touque T_{2N} (N · m)	带平键实心轴 Solid shaft with parallel key			实心花键输出轴 Solid shaft with involute splines										
		d_2	E	G_1	外花键规格 External splines	d_3	d_4	E_1	G_2	k	L	L_1	L_2	L_3	M
09	22 000	120n6	210	95	W130 x 5 x 30 x 24 x 8m	110k6	132k6	70	95	80	120	20	80	20	3 x M16 x 24
10	31 000	130n6	210	95	W140 x 5 x 30 x 26 x 8m	120k6	142k6	80	95	90	130	20	90	20	3 x M16 x 24
11	42 000	150n6	240	109	W160 x 5 x 30 x 30 x 8m	140k6	162k6	90	109	110	150	25	100	25	3 x M16 x 24
12	60 000	160n6	270	106	W180 x 5 x 30 x 34 x 8m	90k6	182k6	100	106	130	160	25	110	25	3 x M16 x 24
13	83 000	180n6	310	118	W200 x 5 x 30 x 38 x 8m	100k6	202k6	110	118	140	175	30	120	25	3 x M16 x 24
14	117 000	210n6	350	139	W220 x 5 x 30 x 42 x 8m	120k6	222k6	125	139	160	195	30	135	30	3 x M16 x 24
16	160 000	230n6	350	142	W250 x 8 x 30 x 30 x 8m	140k6	252k6	140	142	185	220	35	155	30	3 x M20 x 30
17	202 000	250n6	400	139	W260 x 8 x 30 x 31 x 8m	155k6	262k6	150	139	200	240	40	165	35	3 x M20 x 30
18	244 000	260n6	400	134	W280 x 8 x 30 x 34 x 8m	170k6	282k6	160	134	215	250	40	175	35	3 x M20 x 30
19	295 000	280n6	450	148.5	W300 x 8 x 30 x 36 x 8m	180k6	302k6	170	148.5	225	260	40	185	35	3 x M20 x 30
20	354 000	300n6	500	148.5	W310 x 8 x 30 x 37 x 8m	190k6	312k6	180	148.5	235	270	40	195	35	6 x M20 x 30
21	392 000	310n6	500	158	W320 x 8 x 30 x 38 x 8m	200k6	322k6	190	158	250	280	40	205	35	6 x M20 x 30
22	450 000	330n6	500	158	W340 x 8 x 30 x 41 x 8m	210k6	342k6	200	158	265	290	40	215	35	6 x M20 x 30
23	513 000	350n6	550	175	W360 x 8 x 30 x 44 x 8m	230k6	362k6	200	175	275	290	40	215	35	6 x M20 x 30
24	592 000	360n6	590	175	W380 x 8 x 30 x 46 x 8m	245k6	382k6	220	175	290	310	40	235	35	6 x M20 x 30
25	684 000	380n6	590	182	W400 x 8 x 30 x 48 x 8m	260k6	402k6	230	182	310	320	40	245	35	6 x M24 x 36
26	763 000	400n6	650	182	W420 x 8 x 30 x 51 x 8m	280k6	422k6	240	182	330	330	40	255	35	6 x M24 x 36
27	852 000	430n6	690	196.5	W440 x 8 x 30 x 54 x 8m	310k6	442k6	250	196.5	370	340	40	265	35	6 x M24 x 36
28	950 000	450n6	750	196.5	W450 x 8 x 30 x 55 x 8m	330k6	452k6	260	196.5	380	360	45	275	40	6 x M24 x 36
29	1 060 000	460n6	750	209	W460 x 8 x 30 x 56 x 8m	340k6	462k6	270	209	390	370	45	285	40	6 x M24 x 36
30	1 200 000	480n6	790	209	W480 x 8 x 30 x 58 x 8m	360k6	482k6	285	209	410	385	45	300	40	6 x M24 x 36
31	1 330 000	500n6	790	232											
32	1 500 000	510n6	850	232											
33	1 690 000	530n6	900	251											
34	1 920 000	570n6	950	251											
35	2 240 000	600n6	1000	276											
36	2 600 000	640n6	1000	276											

8. 3 输出法兰孔布置图:

8.3 Hole pattern on output flanges:

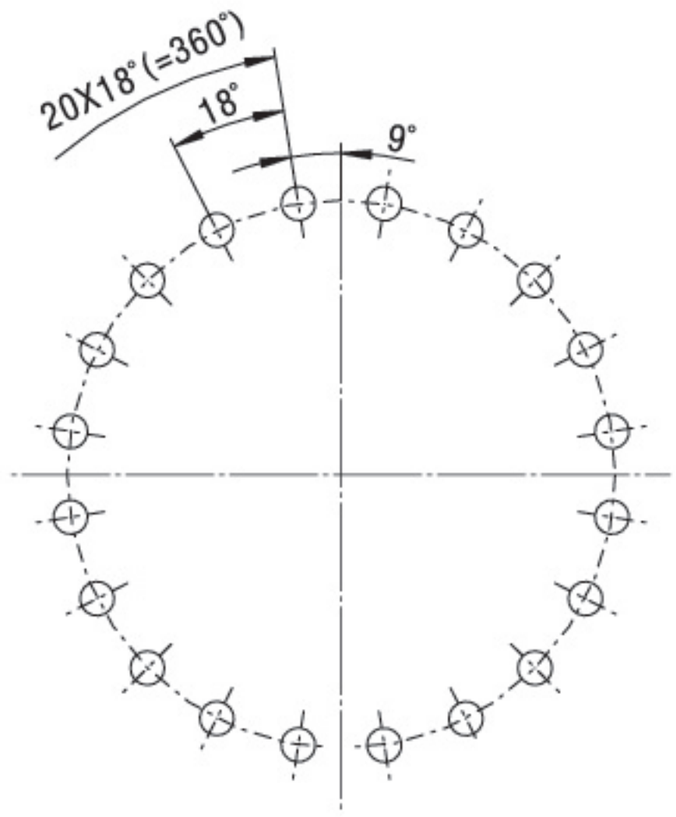

规 格Size: 11,12

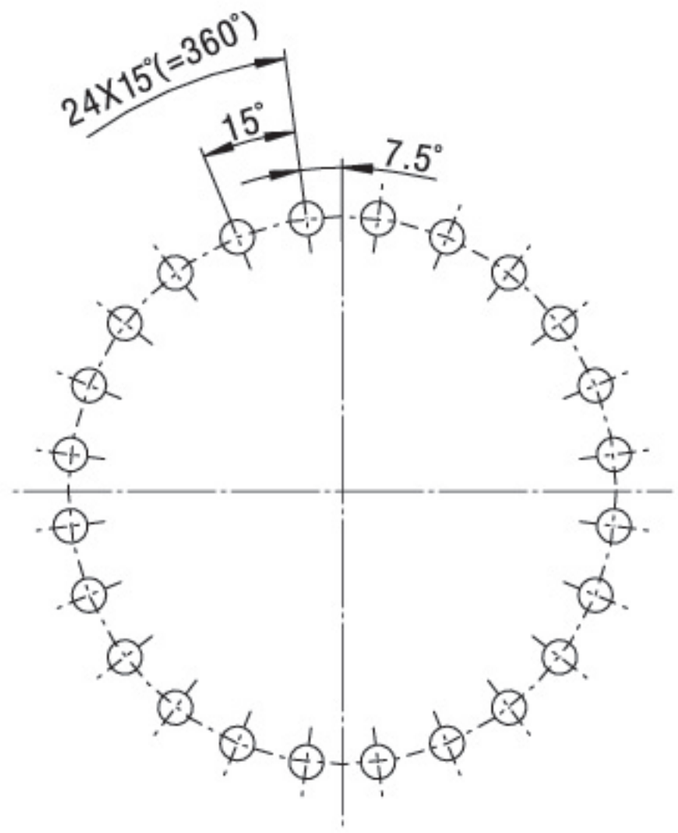

规 格Size: 09,13,17

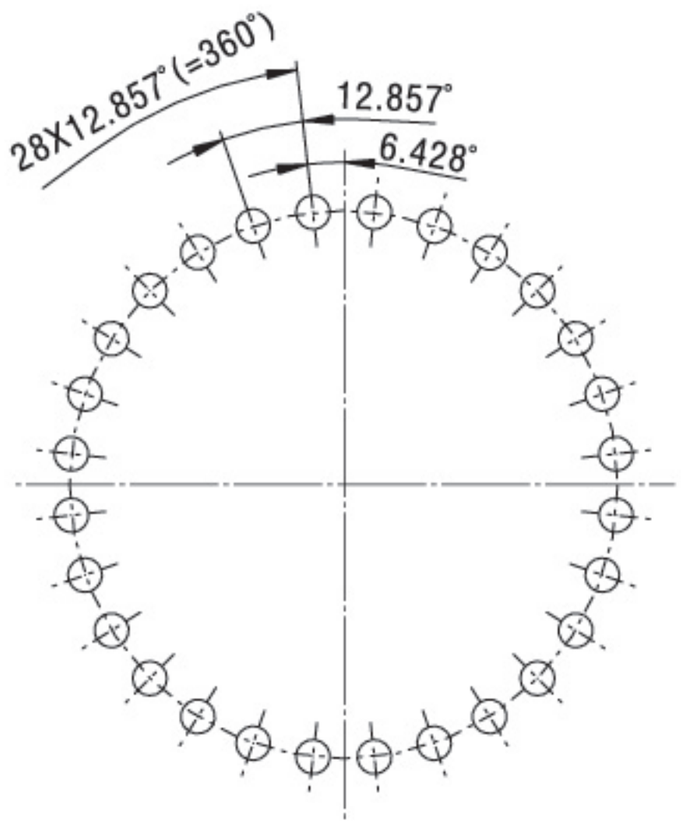

规 格Size: 10

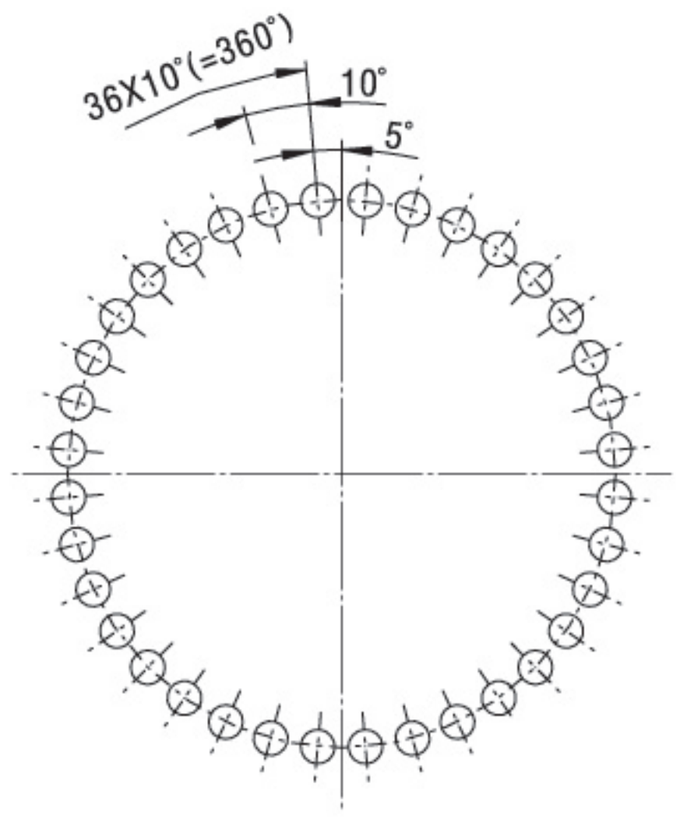

规 格Size: 16, 19, 20, 23, 24, 25, 26, 29, 30, 33, 34

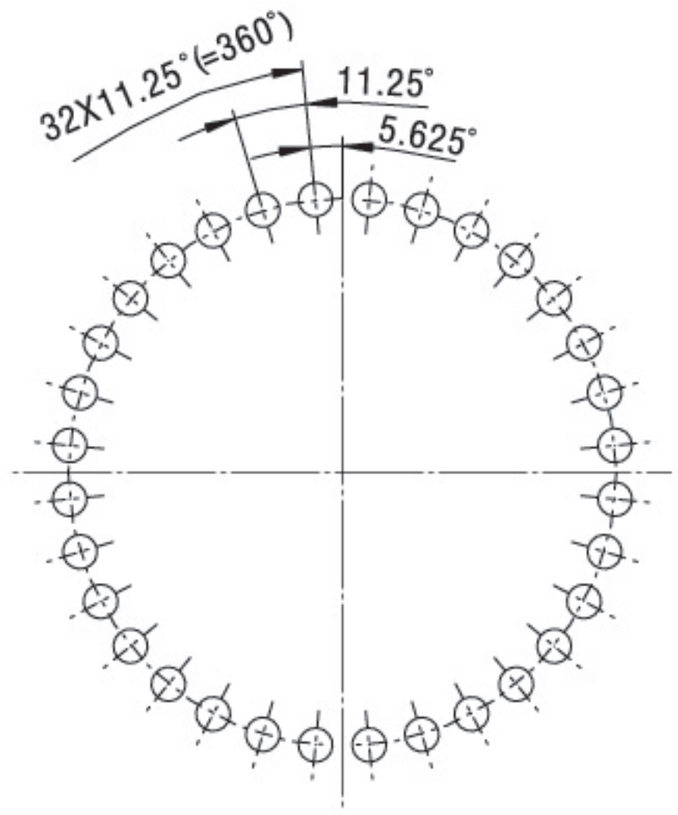

规 格Size: 14, 18, 21, 22, 27, 28, 31, 32

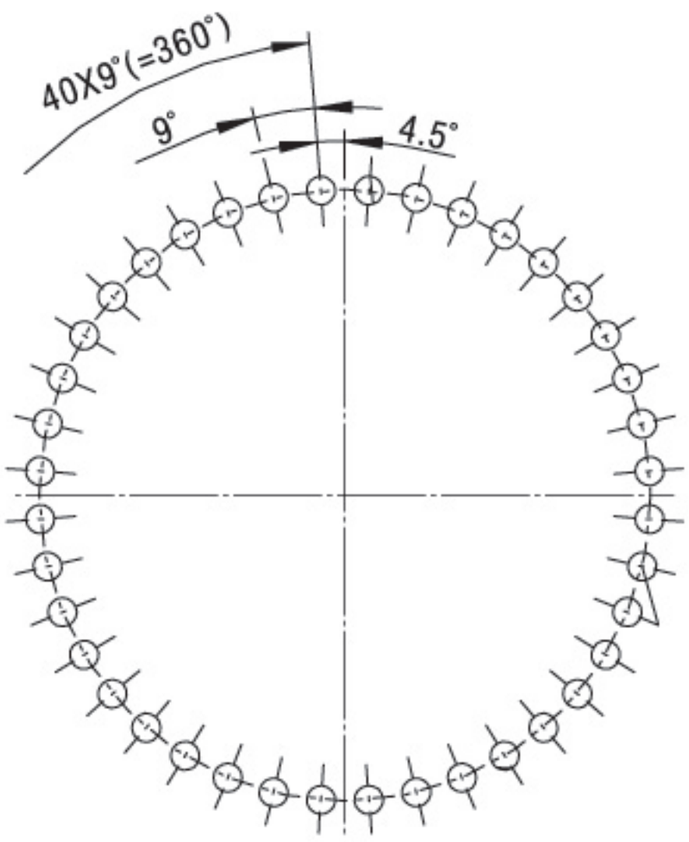

规 格Size: 35, 36

P

9 法兰输入：

9 Flange input:

P2S..

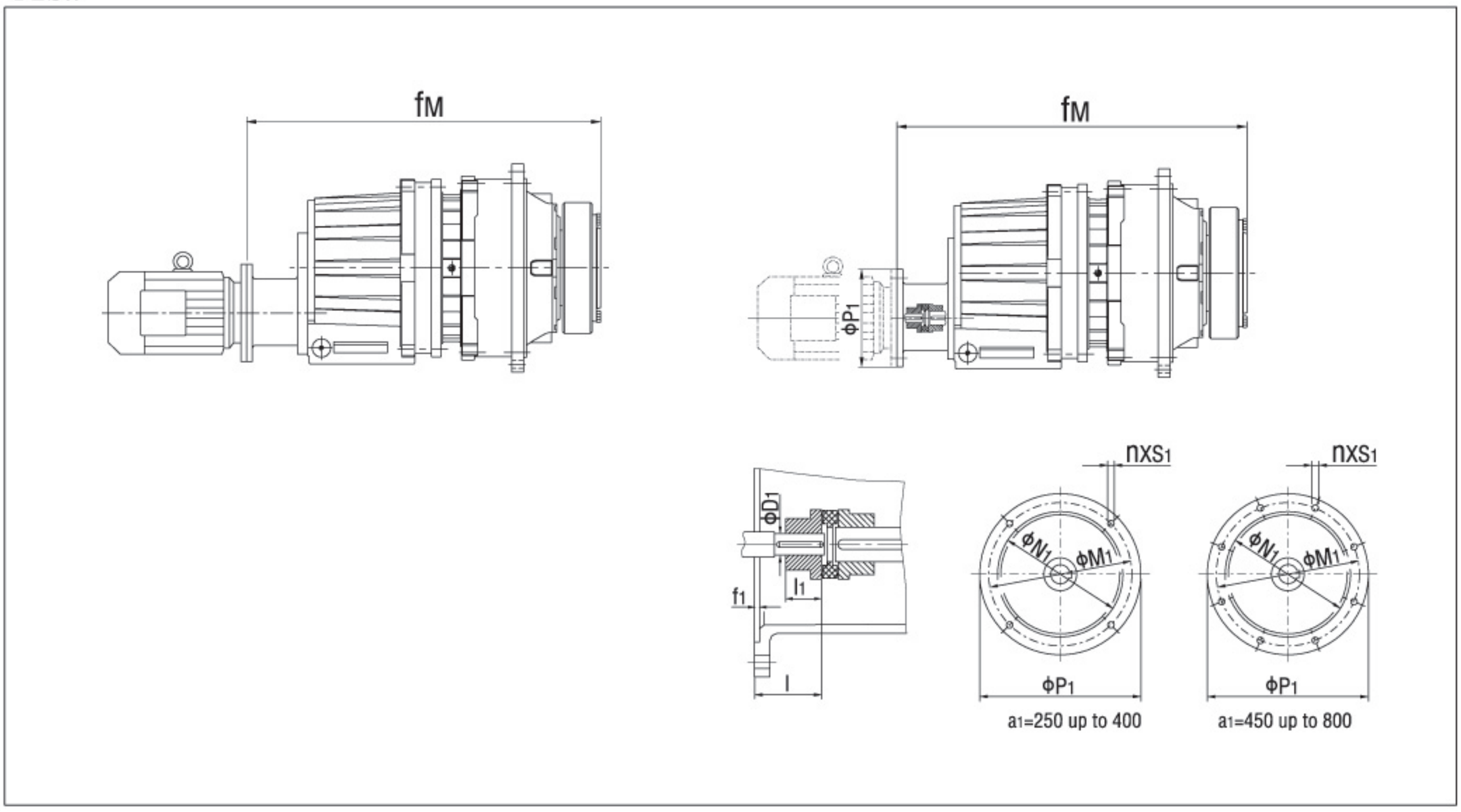

P2S..	电机 Motor (Y)*	法兰 Flange (F)**	D1	f1	fM	l	l1	M1	n	N1	P1	s1
09	160		42	6	832	110	75	300	4	250h7	350	M16
	180		48	6	832	110	75	300	4	250h7	350	M16
10	160		42	6	861	110	75	300	4	250h7	350	M16
	180		48	6	861	110	75	300	4	250h7	350	M16
11	160		42	6	1010	110	75	300	4	250h7	350	M16
	180		48	6	1010	110	75	300	4	250h7	350	M16
	200		55	7	1010	110	75	350	4	300h7	400	M16
12	160		42	6	1044	110	75	300	4	250h7	350	M16
	180		48	6	1044	110	75	300	4	250h7	350	M16
	200		55	7	1044	110	75	350	4	300h7	400	M16
13	225		60	7	1247	140	90	400	8	350h7	450	M16
	250		65	8	1247	140	90	500	8	450h7	550	M16
14	225		60	7	1307	140	90	400	8	350h7	450	M16
	250		65	8	1307	140	90	500	8	450h7	550	M16
16	250		65	7	1452	140	100	500	8	450h7	550	M16
	280		75	8	1452	140	100	500	8	450h7	550	M16
17	250		65	7	1487	140	100	500	8	450h7	550	M16
	280		75	8	1487	140	100	500	8	450h7	550	M16
18	315		80	11	1680	140	110	600	8	550h7	660	M20
19-20	315		80	11	1728	140	110	600	8	550h7	660	M20

注：(1)“*”所选直联电机机座号所对应的功率应满足传动能力表；

“**”表格中所示的法兰为标准型号的法兰，如有异同请另咨询。

(2) 侧面扭力臂组合，请咨询。

Note: (1) “*” the power of the coupled motor in selection must be sufficient for the transmission capacity requirements;
“**” the flanges listed in the table are standard. Consult us if any deviation exists.
(2) For combinations with torque arm on one side, please consult us.

P

P3N..

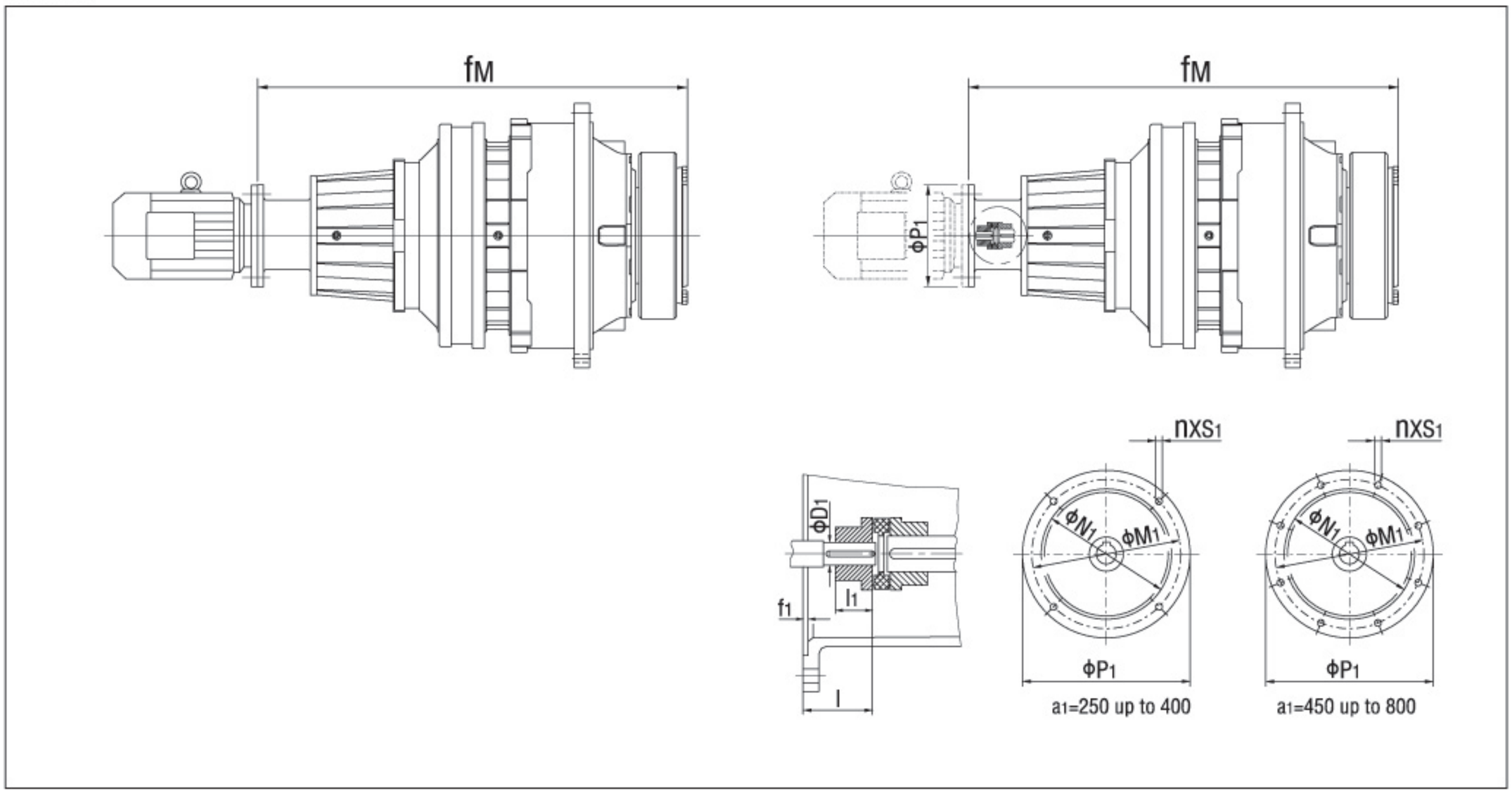

P3N..	电机 Motor (Y)*	法兰 Flange (F)**	D1	f1	fM	l	l1	M1	n	N1	P1	s1
09	132		38	5	912	80	56	265	4	230h7	300	M12
	160		42	6	960	110	80	300	4	250h7	350	M16
	180		48	6	960	110	80	300	4	250h7	350	M16
10	132		38	5	941	80	56	265	4	230h7	300	M12
	160		42	6	989	110	80	300	4	250h7	350	M16
	180		48	6	989	110	80	300	4	250h7	350	M16
11	132		38	5	1002	80	56	265	4	230h7	300	M12
	160		42	6	1050	110	80	300	4	250h7	350	M16
	180		48	6	1050	110	80	300	4	250h7	350	M16
12	132		38	5	1036	80	56	265	4	230h7	300	M12
	160		42	6	1084	110	80	300	4	250h7	350	M16
	180		48	6	1084	110	80	300	4	250h7	350	M16
13	160		42	6	1159	110	80	300	4	250h7	350	M16
	180		48	6	1159	110	80	300	4	250h7	350	M16
	200		55	7	1159	110	80	350	4	300h7	400	M16
14	160		42	6	1219	110	80	300	4	250h7	350	M16
	180		48	6	1219	110	80	300	4	250h7	350	M16
	200		55	7	1219	110	80	350	4	300h7	400	M16
16	200		55	7	1400	110	90	350	4	300h7	400	M16
	225		60	7	1430	140	90	400	8	350h7	450	M16
17	200		55	7	1435	110	90	350	4	300h7	400	M16
	225		60	7	1465	140	90	400	8	350h7	450	M16
18	250		65	7	1636.5	140	100	500	8	450h7	550	M16
	280		75	8	1636.5	140	100	500	8	450h7	550	M16
19, 20	250		65	7	1685	140	100	500	8	450h7	550	M16
	280		75	8	1685	140	100	500	8	450h7	550	M16

注：(1)“*”所选直联电机机座号所对应的功率应满足传动能力表；
“**”表格中所示的法兰为标准型号的法兰，如有异同请另咨询。
(2)侧面扭力臂组合，请咨询。

Note: (1) “*” the power of the coupled motor in selection must be sufficient for the transmission capacity requirements;
“**” the flanges listed in the table are standard. Consult us if any deviation exists.
(2) For combinations with torque arm on one side, please consult us.

P

P3S..

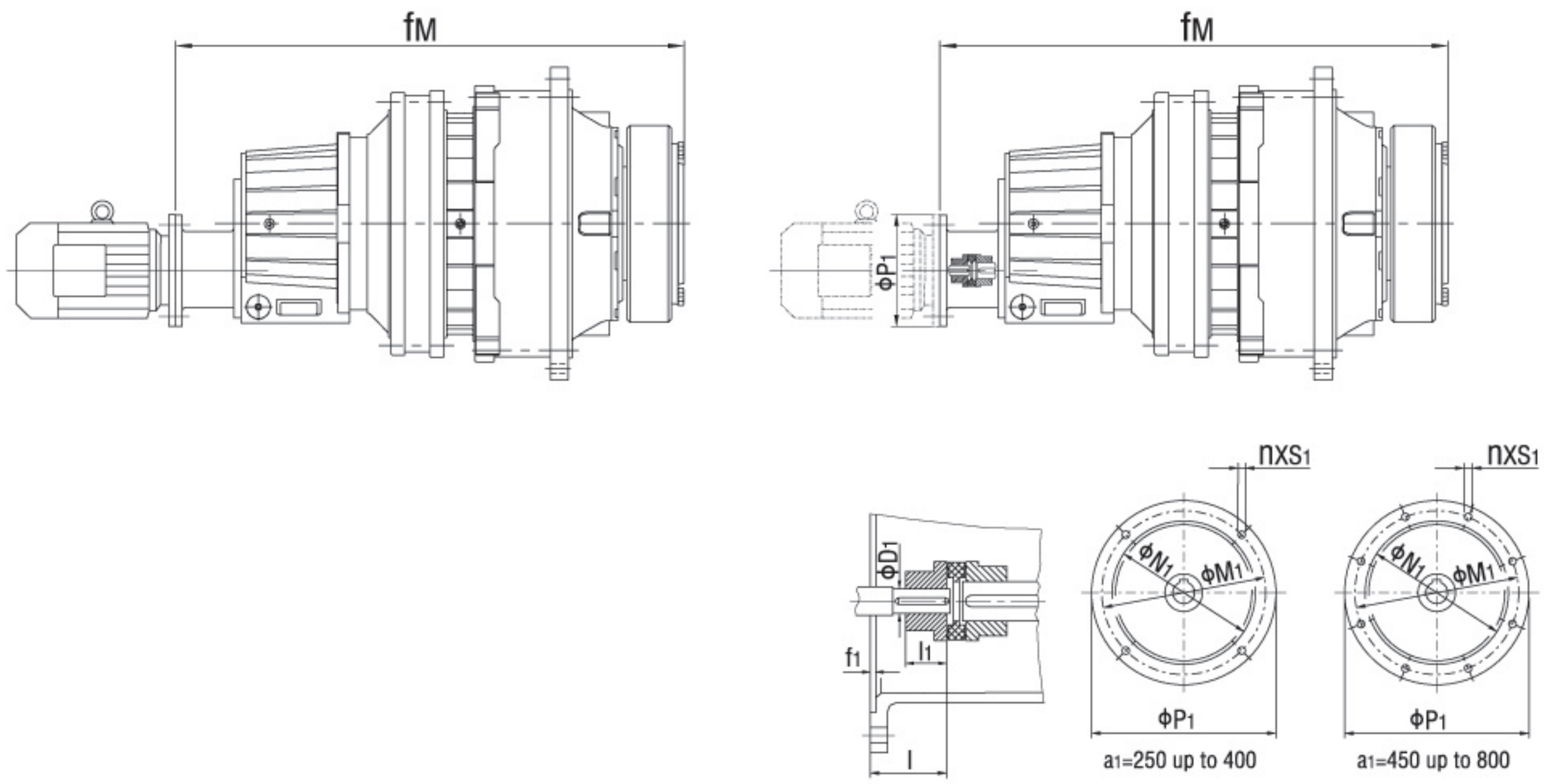

P3S..	电机 Motor (Y)*	法兰 Flange (F)**	D1	f1	fM	l	l1	M1	n	N1	P1	s1
09	100		28	5	865	60	45	215	4	180h7	250	M12
	112		28	5	865	60	45	215	4	180h7	250	M12
	132		38	5	896	80	70	265	4	230h7	300	M12
	160		42	6	931	110	75	300	4	250h7	350	M16
10	100		28	5	894	60	45	215	4	180h7	250	M12
	112		28	5	894	60	45	215	4	180h7	250	M12
	132		38	5	925	80	70	265	4	230h7	300	M12
	160		42	6	957	110	75	300	4	250h7	350	M16
11	112		28	5	955	60	45	215	4	180h7	250	M12
	132		38	5	986	80	70	265	4	230h7	300	M12
	160		42	6	1018	110	75	300	4	250h7	350	M16
	180		48	6	1018	110	75	300	4	250h7	350	M16
12	112		28	5	989	60	45	215	4	180h7	250	M12
	132		38	5	1020	80	70	265	4	230h7	300	M12
	160		42	6	1052	110	75	300	4	250h7	350	M16
	180		48	6	1052	110	75	300	4	250h7	350	M16
13	132		38	5	1095	80	70	265	4	230h7	300	M12
	160		42	6	1127	110	75	300	4	250h7	350	M16
	180		48	6	1127	110	75	300	4	250h7	350	M16
14	132		38	5	1155	80	70	265	4	230h7	300	M12
	160		42	6	1187	110	75	300	4	250h7	350	M16
	180		48	6	1187	110	75	300	4	250h7	350	M16
16	160		42	6	1365	110	75	300	4	250h7	350	M16
	180		48	6	1365	110	75	300	4	250h7	350	M16
	200		55	7	1365	110	75	350	4	300h7	400	M16
17	160		42	6	1390	110	75	300	4	250h7	350	M16
	180		48	6	1390	110	75	300	4	250h7	350	M16
	200		55	7	1400	110	75	350	4	300h7	400	M16
18	180		48	6	1558.5	110	90	300	4	250h7	350	M16
	200		55	6	1570.5	110	90	350	4	300h7	400	M16
	225		60	7	1608.5	110	90	400	8	350h7	450	M16
	250		65	7	1608.5	110	90	500	8	450h7	550	M16
19, 20	180		48	6	1606	110	90	300	4	250h7	350	M16
	200		55	6	1618	110	90	350	4	300h7	400	M16
	225		60	7	1656	110	90	400	8	350h7	450	M16
	250		65	7	1656	110	90	500	8	450h7	550	M16

注：(1) “*” 所选直联电机机座号所对应的功率应满足传动能力表；

“**” 表格中所示的法兰为标准型号的法兰，如有异同请另咨询。

(2) 侧面扭力臂组合，请咨询。

Note: (1) “*” the power of the coupled motor in selection must be sufficient for the transmission capacity requirements; “**” the flanges listed in the table are standard. Consult us if any deviation exists.
(2) For combinations with torque arm on one side, please consult us.

P

P2K..

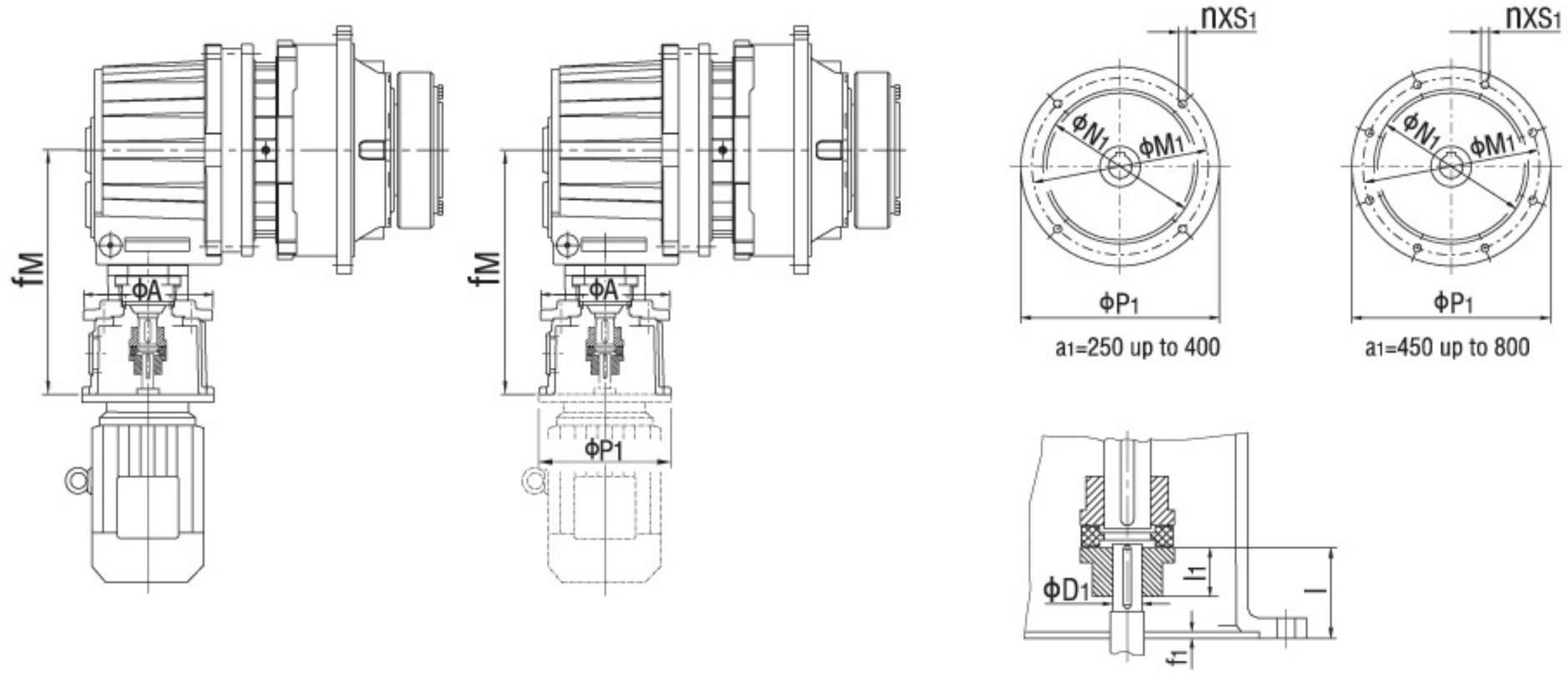

P2K..	电机 Motor (Y)*	法兰 Flange (F)**	A	D1	f1	fM	l	l1	M1	n	N1	P1	s1
09, 10	132		250	38	5	486	80	70	265	4	230h7	300	M12
	160		250	42	6	528	110	75	300	4	250h7	350	M16
11, 12	160		300	42	6	593	110	75	300	4	250h7	350	M16
	180		350	48	6	593	110	75	300	4	250h7	350	M16
	200		350	55	7	593	110	75	350	4	300h7	400	M16
13,14	160		440	42	6	663	110	75	300	4	250h7	350	M16
	180		440	48	6	663	110	75	300	4	250h7	350	M16
	200		440	55	7	663	110	75	350	4	300h7	400	M16
	225		440	60	7	695	140	80	400	8	350h7	450	M16
	250		440	65	8	707	140	85	500	8	450h7	550	M16
16, 17	200		440	55	7	770	110	80	350	4	300h7	400	M16
	225		440	60	7	800	140	80	400	8	350h7	425	M16
	250		440	65	8	812	140	85	500	8	450h7	550	M16
	280		440	75	8	812	140	85	500	8	450h7	550	M16
18, 19, 20	225		440	60	7	932	140	80	400	8	350h7	450	M16
	250		440	65	8	932	140	85	500	8	450h7	550	M16
	280		440	75	8	932	140	85	500	8	450h7	550	M16
	315 *		440	80	11	967	170	100	600	8	550h7	660	M20

注：(1) “*” 所选直联电机机座号所对应的功率应满足传动能力表；
“**” 表格中所示的法兰为标准型号的法兰，如有异同请另咨询。
(2) 侧面扭力臂组合，请咨询。

Note: (1) “*” the power of the coupled motor in selection must be sufficient for the transmission capacity requirements;
“**” the flanges listed in the table are standard. Consult us if any deviation exists.
(2) For combinations with torque arm on one side, please consult us.

P

P2L..

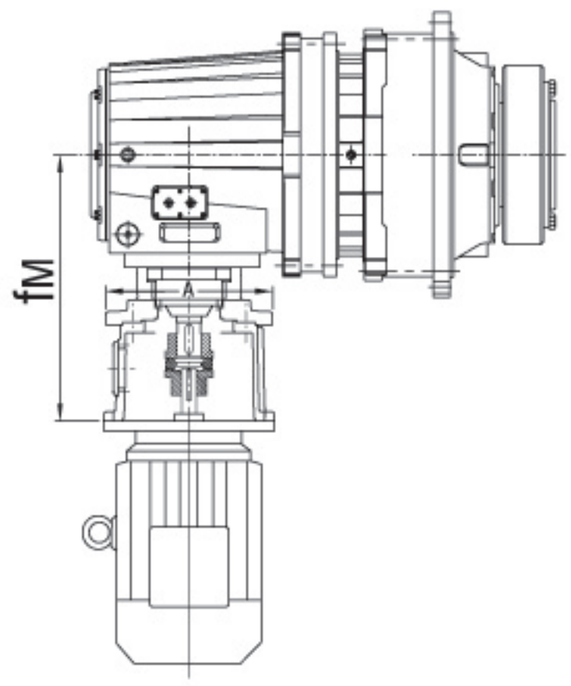

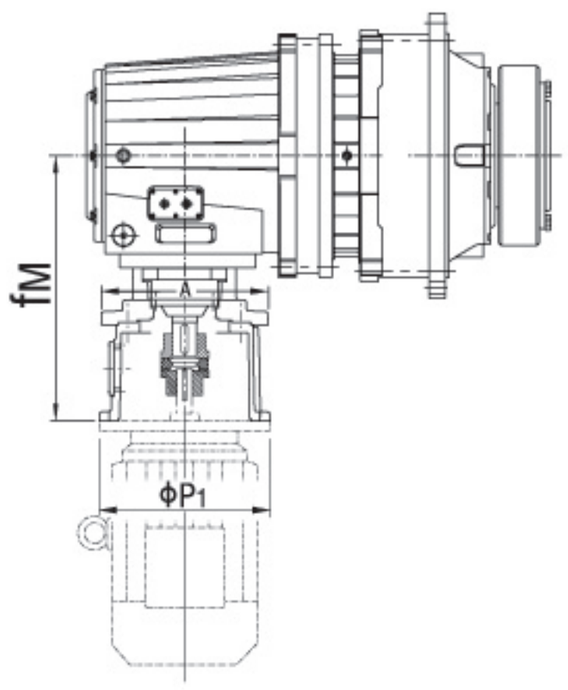

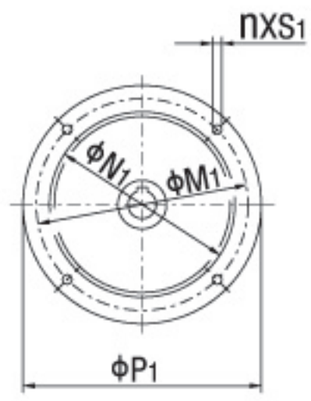

a1=250 up to 400

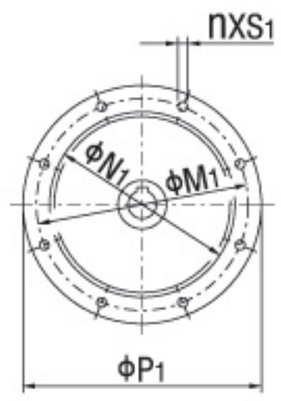

a1=450 up to 800

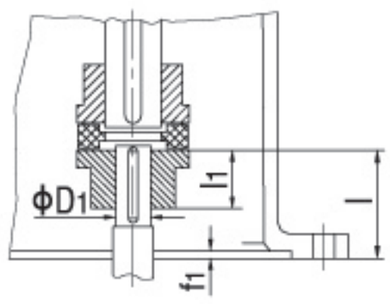

P2L..	电机 Motor (Y)*	法兰 Flange (F)**	A	D1	f1	fM	l1	l	M1	n	N1	P1	s1
09, 10	160		440	42	6	543	75	110	300	4	250h7	350	M16
	180		440	48	6	543	75	110	300	4	250h7	350	M16
	200		440	55	7	543	75	110	350	4	300h7	400	M16
	225		440	60	7	575	80	140	400	8	350h7	450	M16
11, 12	200		440	55	7	600	75	110	350	4	300h7	400	M16
	225		440	60	7	630	80	140	400	8	350h7	450	M16
	250		440	65	8	642	85	140	500	8	450h7	550	M16
13,14	225		440	60	7	732	85	140	400	8	350h7	450	M16
	250		440	65	8	732	85	140	500	8	450h7	550	M16
	280		440	75	8	732	85	140	500	8	450h7	550	M16
16, 17	280		600	75	8	842	100	140	500	8	450h7	550	M16
	315*		650	80	11	872	100	170	600	8	550h7	660	M20
18, 19, 20	315*		650	80	11	987	100	170	600	8	550h7	660	M20
21, 22, 23, 24	315		650	80	11	1122	125	170	600	8	550h7	660	M20
	355		650	95	11	1122	125	170	740	8	680h7	800	M20

注：(1)“*”所选直联电机机座号所对应的功率应满足传动能力表；
“**”表格中所示的法兰为标准型号的法兰，如有异同请另咨询。
(2) 侧面扭力臂组合，请咨询。

Note: (1) “*” the power of the coupled motor in selection must be sufficient for the transmission capacity requirements;
“**” the flanges listed in the table are standard. Consult us if any deviation exists.
(2) For combinations with torque arm on one side, please consult us.

P

P3K..

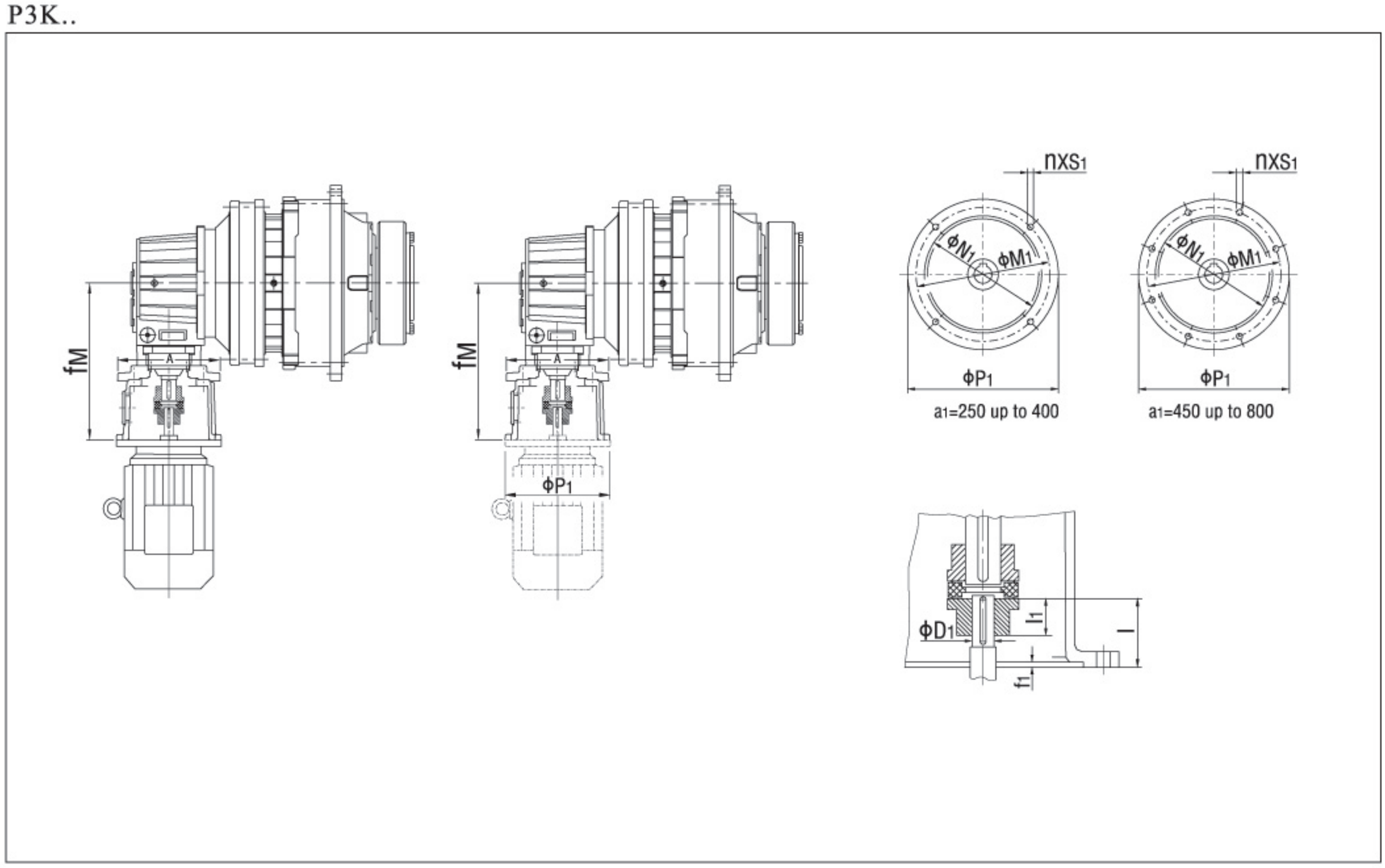

P3K..	电机 Motor (Y)*	法兰 Flange (F)**	A	D1	f1	fM	l	l1	M1	N1	n	P1	s1
09,10,11 12,13,14	132		250	38	5	486	80	70	265	230h7	4	300	M12
	160		250	42	6	528	110	75	300	250h7	4	350	M16
	180		250	48	6	528	110	75	300	250h7	4	350	M16
16, 17	160		350	42	6	593	110	75	300	250h7	4	350	M16
	180		350	40	6	593	110	75	300	250h7	4	350	M16
	200		350	55	7	593	110	75	350	300h7	4	400	M16
18,19,20 21, 22	160		440	42	6	663	110	75	300	250h7	4	350	M16
	180		440	48	6	663	110	75	300	250h7	4	350	M16
	200		440	35	7	663	110	75	350	300h7	4	400	M16
	225		440	60	7	695	140	80	400	350h7	8	450	M16
	250		440	65	8	707	140	85	500	450h7	8	550	M16
23,24 25,26	200		440	55	6	770	110	80	350	300h7	4	400	M16
	225		440	60	7	800	140	80	400	350h7	8	450	M16
	250		440	62	7	812	140	85	500	450h7	8	550	M16
	280		440	75	8	812	140	85	500	450h7	8	550	M16
27,28 29,30	225		440	60	7	932	140	85	400	350h7	8	450	M16
	250		440	65	7	932	140	85	500	450h7	8	550	M16
	280		440	75	8	932	140	85	500	450h7	8	550	M16
	315 *		440	80	11	967	170	100	600	550h7	8	660	M20

注：(1) “*”所选直联电机机座号所对应的功率应满足传动能力表；
“**”表格中所示的法兰为标准型号的法兰，如有异同请另咨询。
(2) 侧面扭力臂组合，请咨询。

Note: (1) “*” the power of the coupled motor in selection must be sufficient for the transmission capacity requirements;
“**” the flanges listed in the table are standard. Consult us if any deviation exists.
(2) For combinations with torque arm on one side, please consult us.

P

10 组合型：

10 Combi-type:

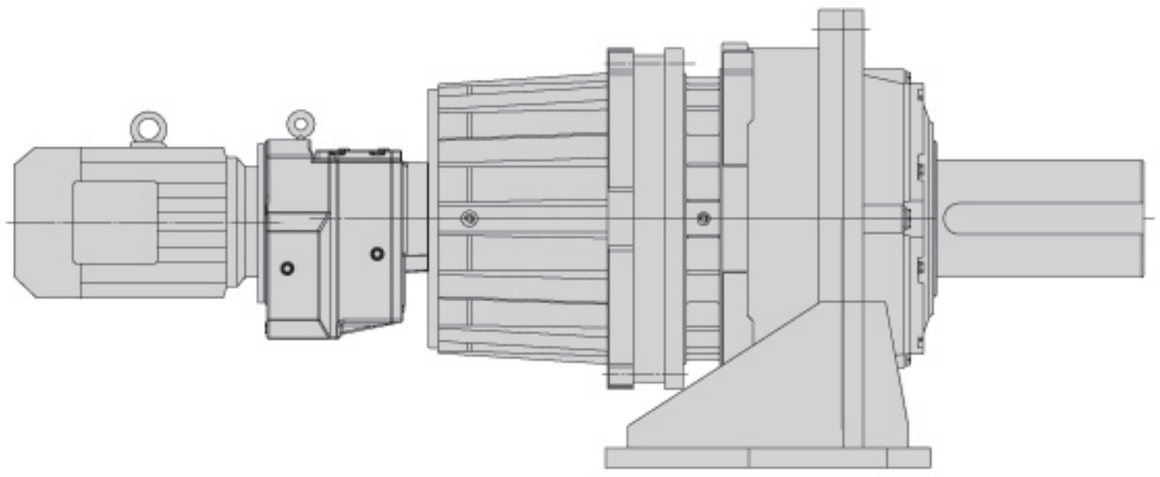

P../CR组合，详情来电咨询。

P../CR combination upon request.

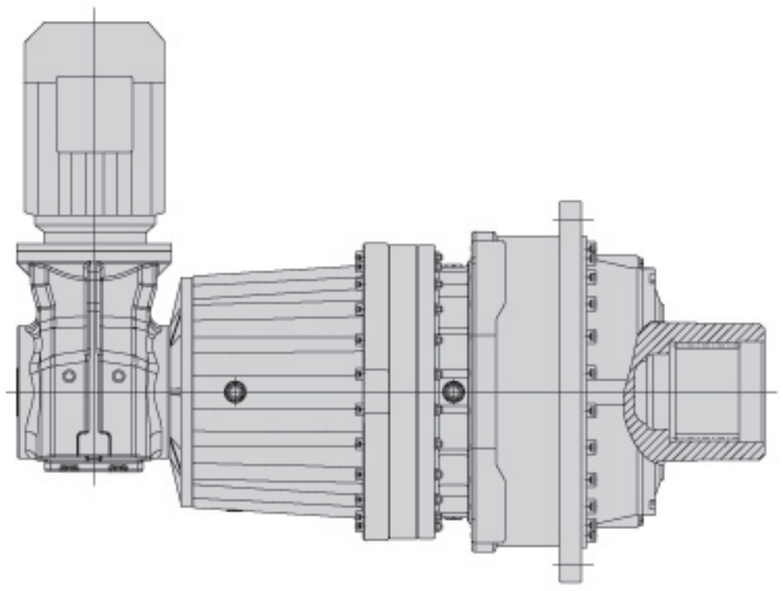

P../K组合，详情来电咨询。

P../K combination upon request.

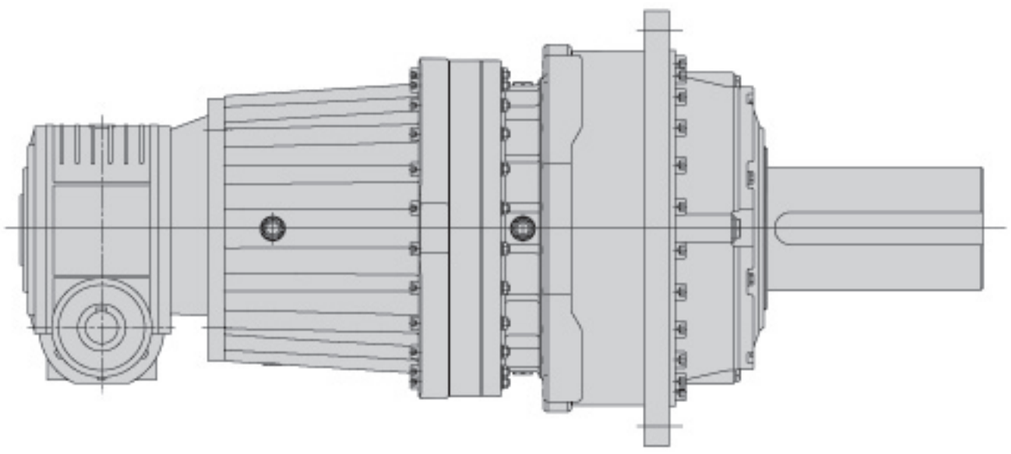

P../RV组合，详情来电咨询。

P../RV combination upon request.

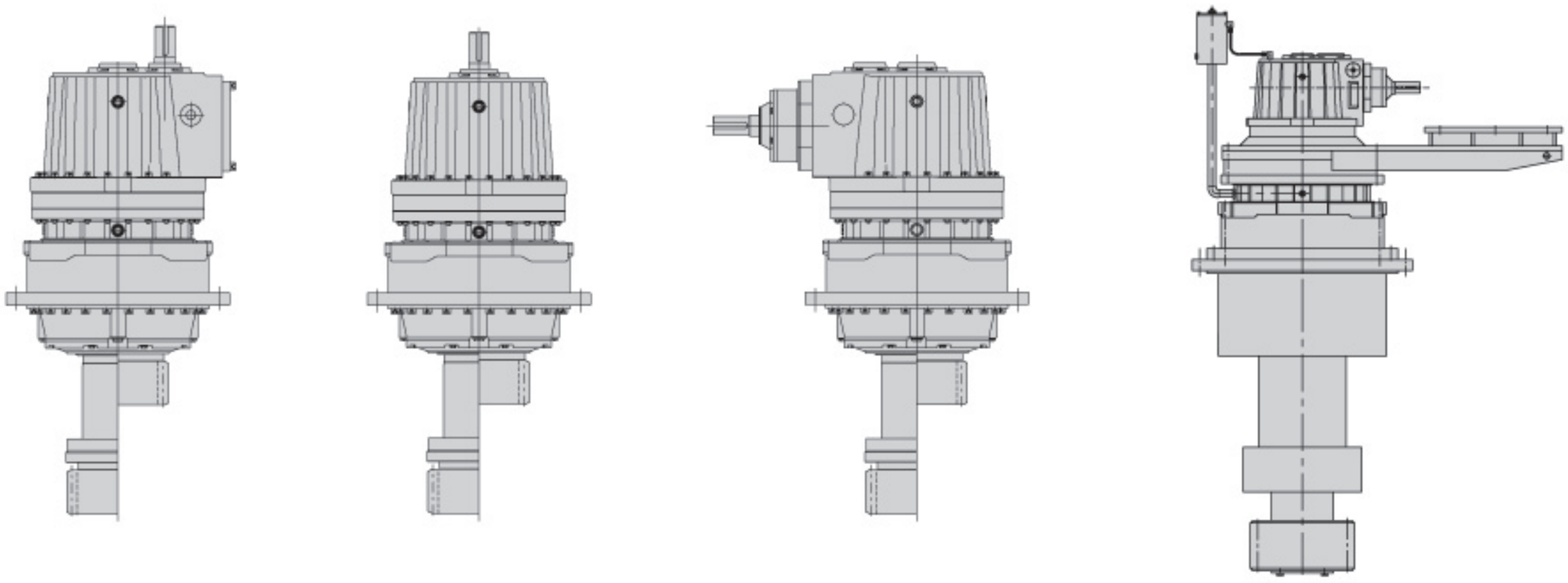

P../TR 回转机构，详情来电咨询。

P../TR combination(Slewing Gears) upon request.

P

11 附件：

11 Accessories:

11.1 输出\输入支架(附件代号 B42/B43)：

11.1 Output/Input Bracket(Code:B42/B43)：

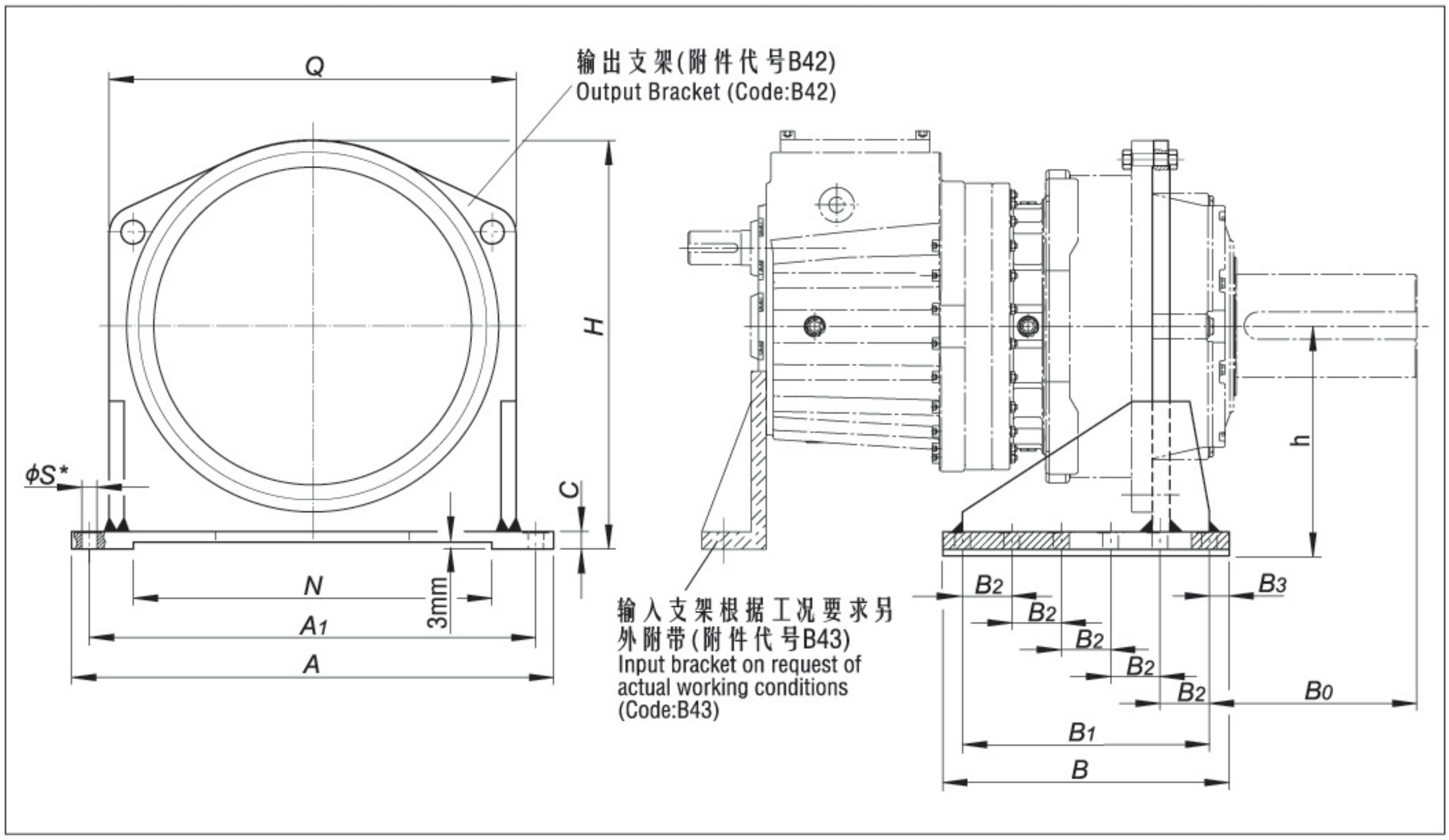

规格 Size	A	A1	B	B0	B1	B2	B3	C	h	H	N	Q	螺栓孔 Hole S*	螺栓孔 Hole 数量 No.	重量 Weight (kg)
09	580	520	330	240	260	130	35	20	260	480	380	450	26	2 x 3	56
10	630	570	360	240	290	145	35	25	280	525	430	500	26	2 x 3	82
11	680	620	400	274	330	110	35	30	315	585	480	550	26	2 x 4	122
12	760	700	450	292	380	95	35	30	360	670	560	630	26	2 x 5	157
13	820	750	490	334	420	105	35	35	390	720	610	680	26	2 x 5	213
14	920	840	560	380	480	120	40	35	430	800	680	760	33	2 x 5	270
16	980	900	580	374	500	125	40	40	470	865	700	820	33	2 x 5	350
17	1130	1040	670	405	580	145	45	45	540	998	810	940	39	2 x 5	520
18	1180	1080	720	385	620	155	50	45	560	1035	830	980	39	2 x 5	580
19	1260	1160	760	450	640	160	60	50	590	1090	880	1050	45	2 x 5	720
20	1260	1160	760	500	640	160	60	50	590	1090	880	1050	45	2 x 5	720
21	1440	1320	840	513	700	175	70	55	660	1228	1020	1170	52	2 x 5	940
22	1440	1320	840	513	700	175	70	55	660	1228	1020	1170	52	2 x 5	940
23	1540	1420	910	567	750	150	80	60	730	1345	1100	1270	52	2 x 6	1275
24	1540	1420	910	607	750	150	80	60	730	1345	1100	1270	52	2 x 6	1275
25	1700	1550	1000	574	860	215	70	65	795	1465	1240	1400	62	2 x 5	1670
26	1700	1550	1000	634	860	215	70	65	795	1465	1240	1400	62	2 x 5	1670
27	1850	1700	1100	664	950	190	75	70	870	1610	1370	1550	62	2 x 6	2170
28	1850	1700	1100	724	950	190	75	70	870	1610	1370	1550	62	2 x 6	2170
29	1980	1820	1180	731	1000	250	90	75	925	1715	1460	1640	70	2 x 5	2650
30	1980	1820	1180	771	1000	250	90	75	925	1715	1460	1640	70	2 x 5	2650
31	2150	1950	1300	773	1100	220	100	75	1000	1845	1570	1750	70	2 x 6	3100
32	2150	1950	1300	833	1100	220	100	75	1000	1845	1570	1750	70	2 x 6	3100
33	2230	2050	1350	883	1150	230	100	85	1050	1940	1630	1850	78	2 x 6	3850
34	2230	2050	1350	933	1150	230	100	85	1050	1940	1630	1850	78	2 x 6	3850
35	敬请垂询 On request														
36															

* 参阅 See 53/P

P

11.2 单向扭力臂(附件代号 T71)：

11.2 Torque arm on one side (code: T71):

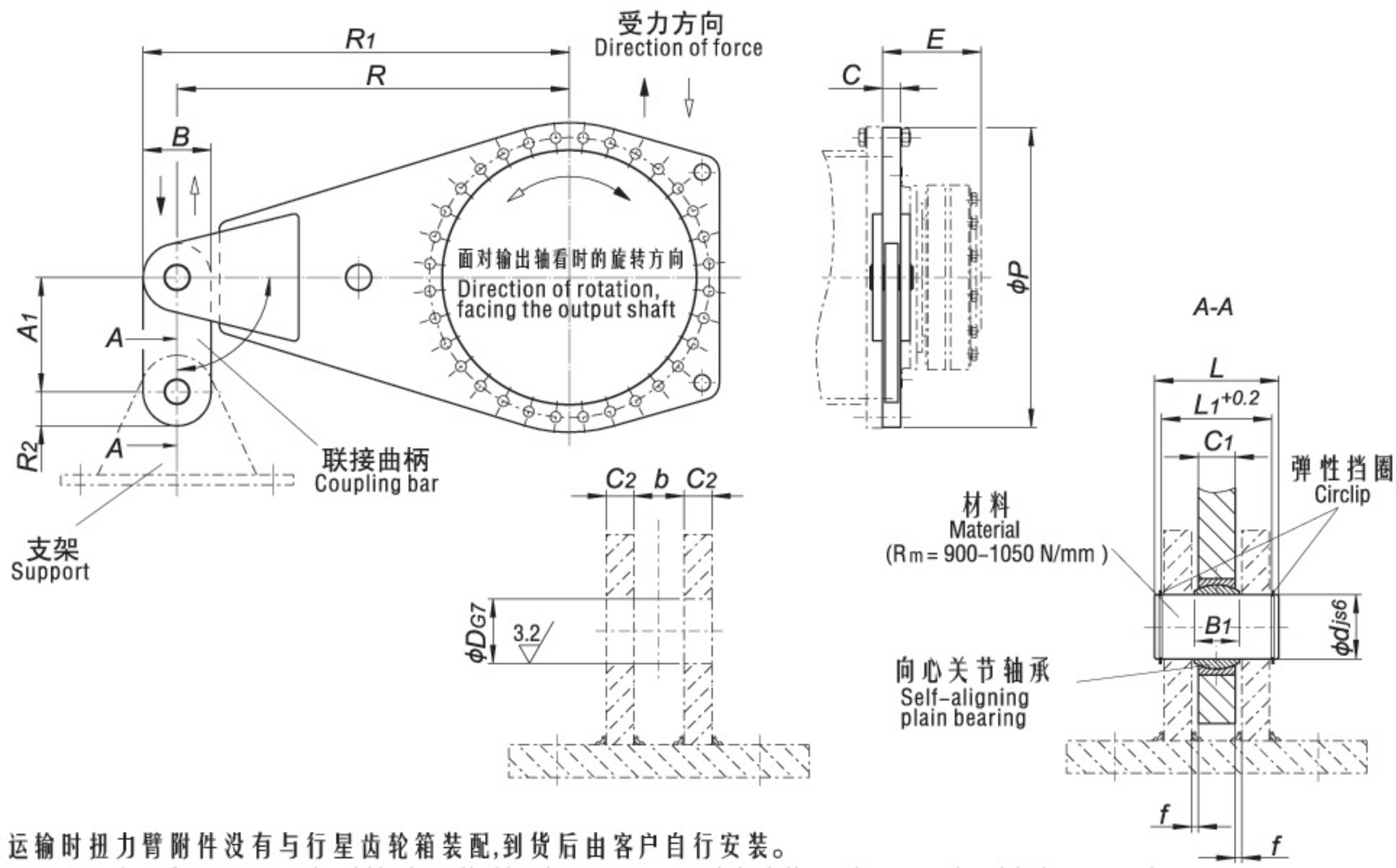

在运输时扭力臂附件没有与行星齿轮箱装配,到货后由客户自行安装。
The Accessories of torque arm should be installed by the customers as it is delivered separately with the gear unit.

规格 Size	T_{2N} (N・m)	A_1	b	B	B_1	C	C_1	C_2 min.	d	D	E	f	L_1	L	P	R	R_1	R_2	重量 Weight (Kg)
09	22 000	140	25	100	$22^{0}_{-0.12}$	25	18	15	30		165	3.5	59.5	70	440	555	605	50	38
10	31 000	140	30	105	$25^{0}_{-0.12}$	30	20	15	35		174	5	64.5	75	485	615	667.5	52.5	51
11	42 000	160	30	130	$28^{0}_{-0.12}$	30	22	18	40		204	4	70.5	85	540	685	750	65	82
12	60 000	160	30	130	$28^{0}_{-0.12}$	30	22	18	40		224	4	70.5	85	620	785	850	65	85
13	83 000	180	35	145	$32^{0}_{-0.12}$	35	25	20	45		241	5	79.5	95	665	840	912.5	72.5	113
14	117 000	200	40	145	$35^{0}_{-0.12}$	40	30	20	50		278	5	85	100	740	940	1012.5	72.5	145
16	160 000	240	50	155	$44^{0}_{-0.15}$	50	35	25	60		285	7.5	105	120	790	1000	1077.5	77.5	206
17	202 000	240	50	170	$44^{0}_{-0.15}$	50	35	25	60		294	7.5	105	120	915	1165	1250	85	274
18	244 000	280	55	210	$49^{0}_{-0.15}$	55	40	30	70		303	7.5	120	135	955	1210	1315	105	365
19	295 000	320	60	210	$55^{0}_{-0.15}$	60	45	30	80		327.5	7.5	125	145	1005	1300	1405	105	423
20	354 000	320	60	210	$55^{0}_{-0.15}$	60	45	30	80		327.5	7.5	125	145	1005	1300	1405	105	423
21	392 000	320	60	225	$55^{0}_{-0.15}$	60	45	30	80		354	7.5	125	145	1140	1450	1562.5	113	530
22	450 000	320	60	225	$55^{0}_{-0.15}$	60	45	30	80		354	7.5	125	145	1140	1450	1562.5	113	530
23	513 000	360	65	250	$60^{0}_{-0.20}$	65	50	30	90		380	7.5	130	150	1235	1575	1700	125	665
24	592 000	360	65	250	$60^{0}_{-0.20}$	65	50	30	90		380	7.5	130	150	1235	1575	1700	125	665
25	684 000	400	75	275	$70^{0}_{-0.20}$	75	55	35	100		407	10	150	170	1350	1720	1857.5	138	940
26	763 000	400	75	275	$70^{0}_{-0.20}$	75	55	35	100		407	10	150	170	1350	1720	1857.5	138	940
27	852 000	440	75	300	$70^{0}_{-0.20}$	75	55	35	110		453	10	150	175	1490	1900	2050	150	1120
28	950 000	440	75	300	$70^{0}_{-0.20}$	75	55	35	110		453	10	150	175	1490	1900	2050	150	1120
29	1 060 000	440	75	315	$70^{0}_{-0.20}$	75	55	35	110		483	10	150	175	1600	2035	2192.5	158	1260
30	1 200 000	440	75	315	$70^{0}_{-0.20}$	75	55	35	110		483	10	150	175	1600	2035	2192.5	158	1260
31 – 36	敬请垂询 On request																		

11.3 带橡胶衬套的双向扭力臂(附件代号 T72)：

11.3 Torque arm on two sides with rubber bushes (code: T72):

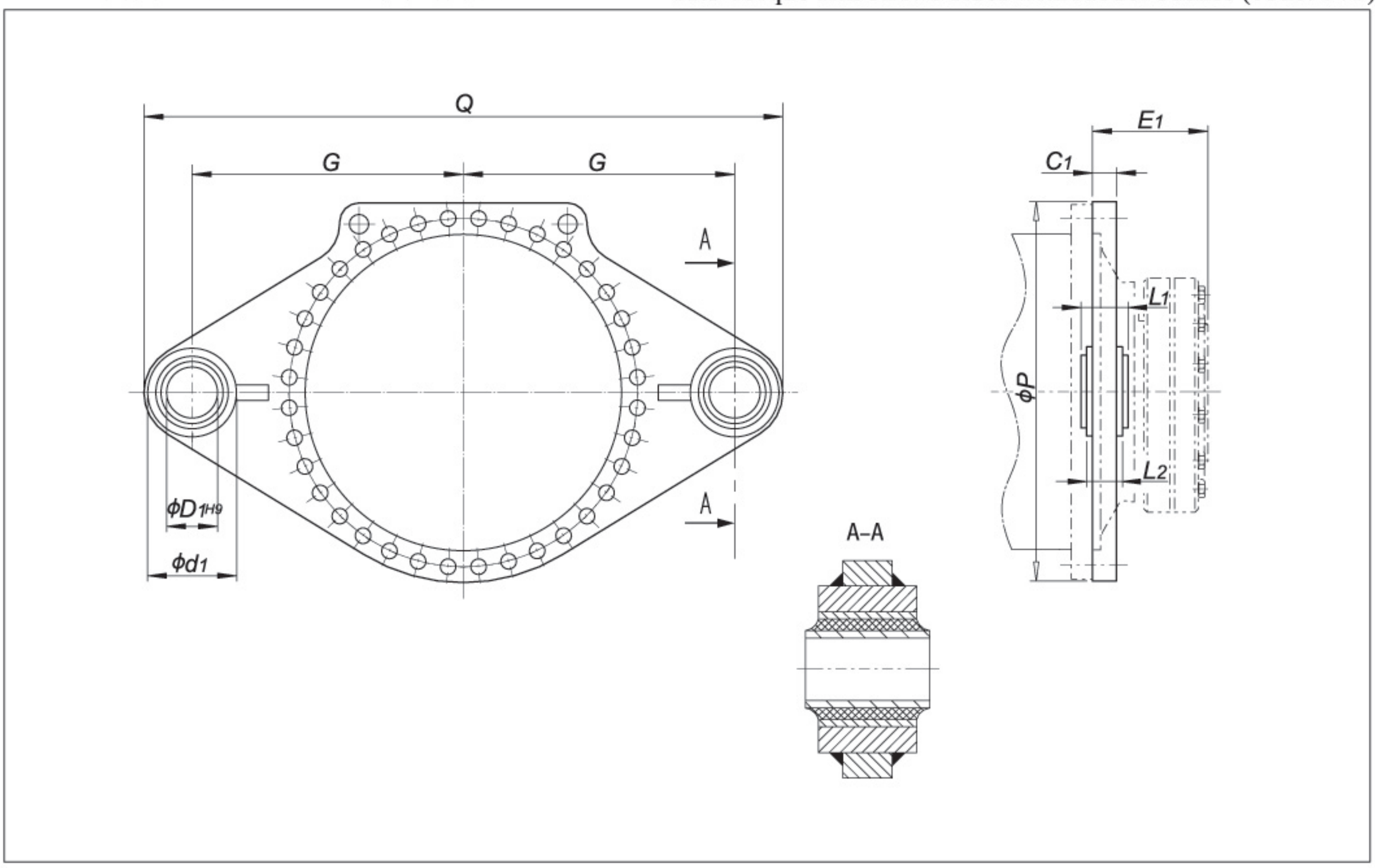

规 格 Size	T_{2N} (N・m)	C_1	d_1	D1	E_1	G	L_1	L_2	P	Q	重量 Weight (kg)
09	22 000	30	115	50h8	165	500	110	100	440	1140	58
10	31 000	30	115	50h8	174	550	110	100	485	1240	72
11	42 000	30	180	100h8	204	575	120	110	540	1355	95
12	60 000	35	180	100h8	224	625	120	110	620	1455	120
13	83 000	35	210	110h8	241	600	180	170	665	1435	145
14	117 000	40	210	110h8	278	650	180	170	740	1535	170
16	160 000	40	240	124h8	285	700	230	220	790	1670	230
17	202 000	40	240	124h8	294	750	230	220	915	1770	300
18	244 000	50	240	124h8	303	900	230	220	955	2070	400

11.4 扭转轴支架(附件代号 B41)：

11.4 Torsion shaft support (code: B41):

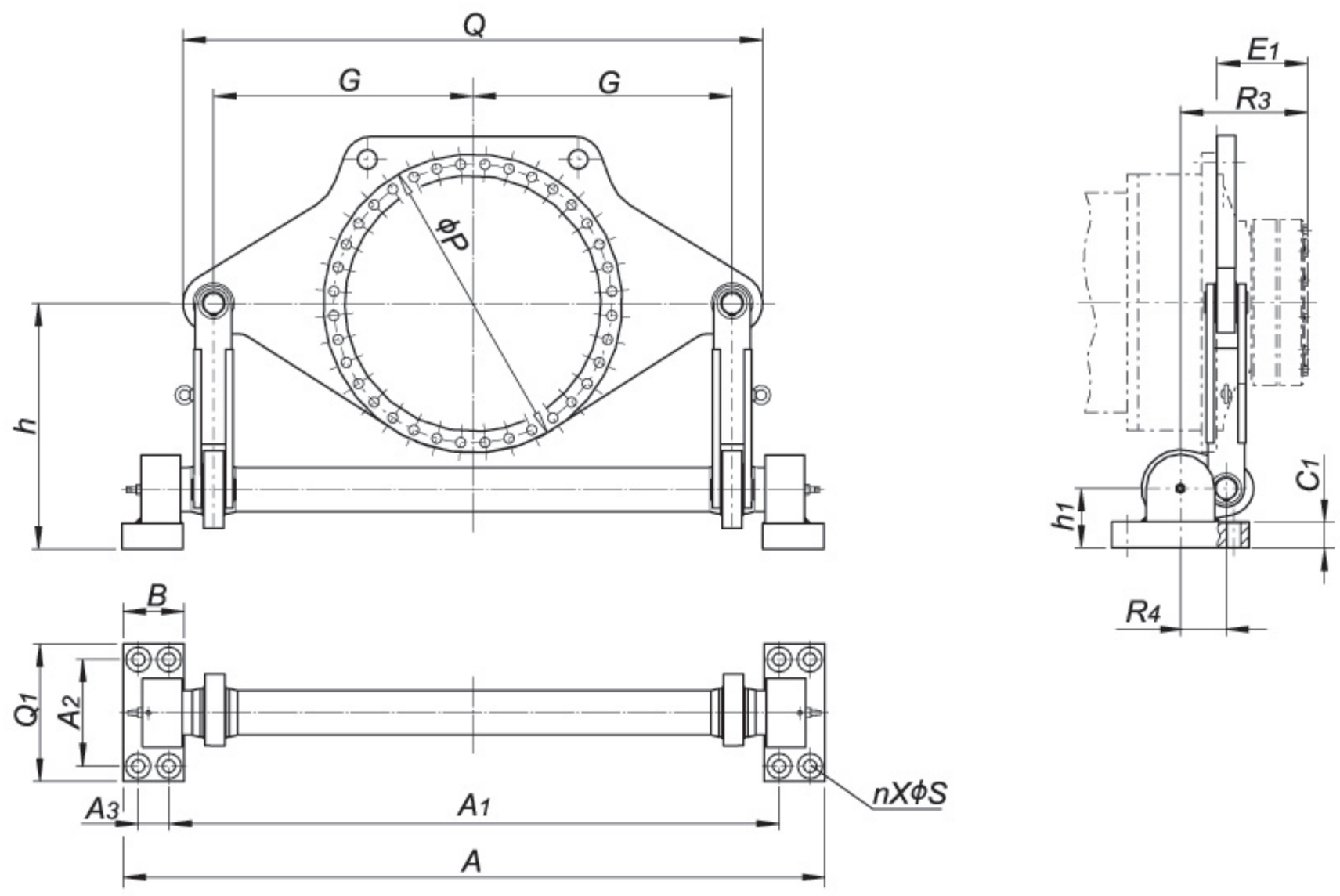

规 格 Size	T2N (N・m)	A	A1	A2	A3	B	C1	E1	G	h	h1	n	P	Q	Q1	R3	R4	S	重 量 Weight (Kg)
09	22 000	1619	1414	250	65	140	48.5	165	550	560	120	8	610	1230	330	247.5	105	33	300
10	31 000	1619	1414	250	65	140	48.5	174	550	560	120	8	610	1230	330	256.5	105	33	300
11	42 000	1619	1414	250	65	140	48.5	204	550	560	120	8	610	1230	330	286.5	105	33	300
12	60 000	1619	1414	250	65	140	48.5	224	550	560	120	8	610	1230	330	306.5	105	33	300
13	83 000	1837	1604	280	75	158	68.5	241	650	620	155	8	775	1450	380	358.5	145	39	600
14	117 000	1837	1604	280	75	158	68.5	278	650	620	155	8	775	1450	380	395.5	145	39	600
16	160 000	1837	1604	280	75	158	68.5	285	650	620	155	8	775	1450	380	402.5	145	39	600
17	202 000	2041	1777	315	84	180	73.5	294	750	700	170	8	955	1680	400	431.5	165	39	900
18	244 000	2041	1777	315	84	180	73.5	303	750	700	170	8	955	1680	400	440.5	165	39	900
19	295 000	2300	2000	350	100	200	83.5	328	850	860	195	8	985	1900	450	470.5	175	45	1400
20	354 000	2300	2000	350	100	200	83.5	328	850	860	195	8	985	1900	450	470.5	175	45	1400
21	392 000	2591	2254	400	113	225	88.5	354	950	900	210	8	1120	2110	530	506.5	190	45	1700
22	450 000	2591	2254	400	113	225	88.5	354	950	900	210	8	1120	2110	530	506.5	190	45	1700
23	513 000	2871	2496	450	125	250	98.5	380	1063	1060	235	8	1215	2385	590	562.5	220	45	2150
24	592 000	2871	2496	450	125	250	98.5	380	1063	1060	235	8	1215	2385	590	562.5	220	45	2150
25	684 000	3236	2816	500	140	280	118.5	407	1150	1200	275	8	1350	2600	650	614.5	245	52	2700
26	763 000	3236	2816	500	140	280	118.5	407	1150	1200	275	8	1350	2600	650	614.5	245	52	2700
27	852 000	3327	2887	530	150	290	128.5	453	1250	1250	300	8	1490	2820	700	670.5	255	52	3400
28	950 000	3327	2887	530	150	290	128.5	453	1250	1250	300	8	1490	2820	700	670.5	255	52	3400
29	1 060 000	3673	3200	560	158	315	128.5	483	1360	1350	300	8	1565	3080	750	718	280	62	4350
30	1 200 000	3673	3200	560	158	315	128.5	483	1360	1350	300	8	1565	3080	750	718	280	62	4350
31	1 330 000	3906	3408	590	168	330	148.5	538	1450	1400	340	8	1695	3260	790	788	300	70	5500
32	1 500 000	3906	3408	590	168	330	148.5	538	1450	1400	340	8	1695	3260	790	788	300	70	5500
33	1 680 000	4116	3588	620	178	350	158.5	573	1550	1500	375	8	1785	3520	840	840.5	320	70	7000
34	1 920 000	4116	3588	620	178	350	158.5	573	1550	1500	375	8	1785	3520	840	840.5	320	70	7000
35–36	敬请垂询 On request																		

11.5电机安装支架:

11.5 Motor bracket:

P.K..,P.L..立式安装带输入电机安装架(附件代号B62)

Motor bracket for P.K.., P.L.. vertical mounting(code: B62)

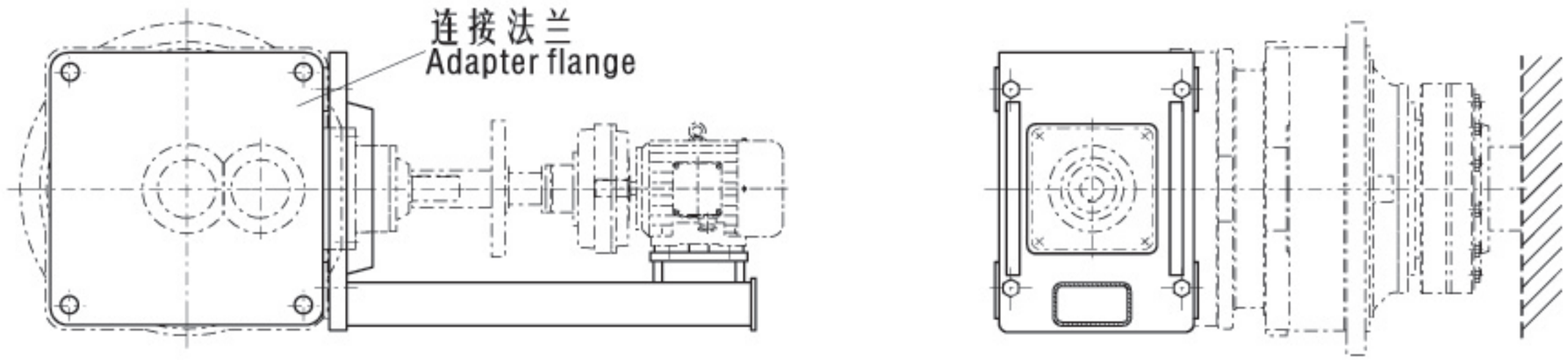

P.K..,P.L..水平安装时的电机机架(附件代号B63)

Motor bracket for P.K.., P.L.. horizontal mounting(code: B63)

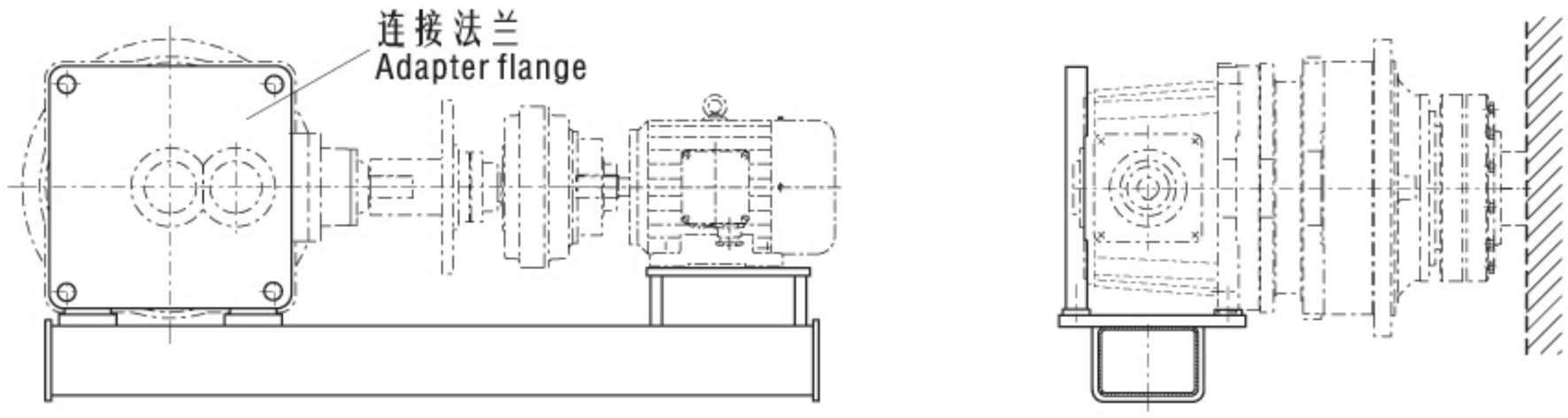

卧式电机安装支架(附件代号B61)

Brackets for horizontal motor(code: B61)

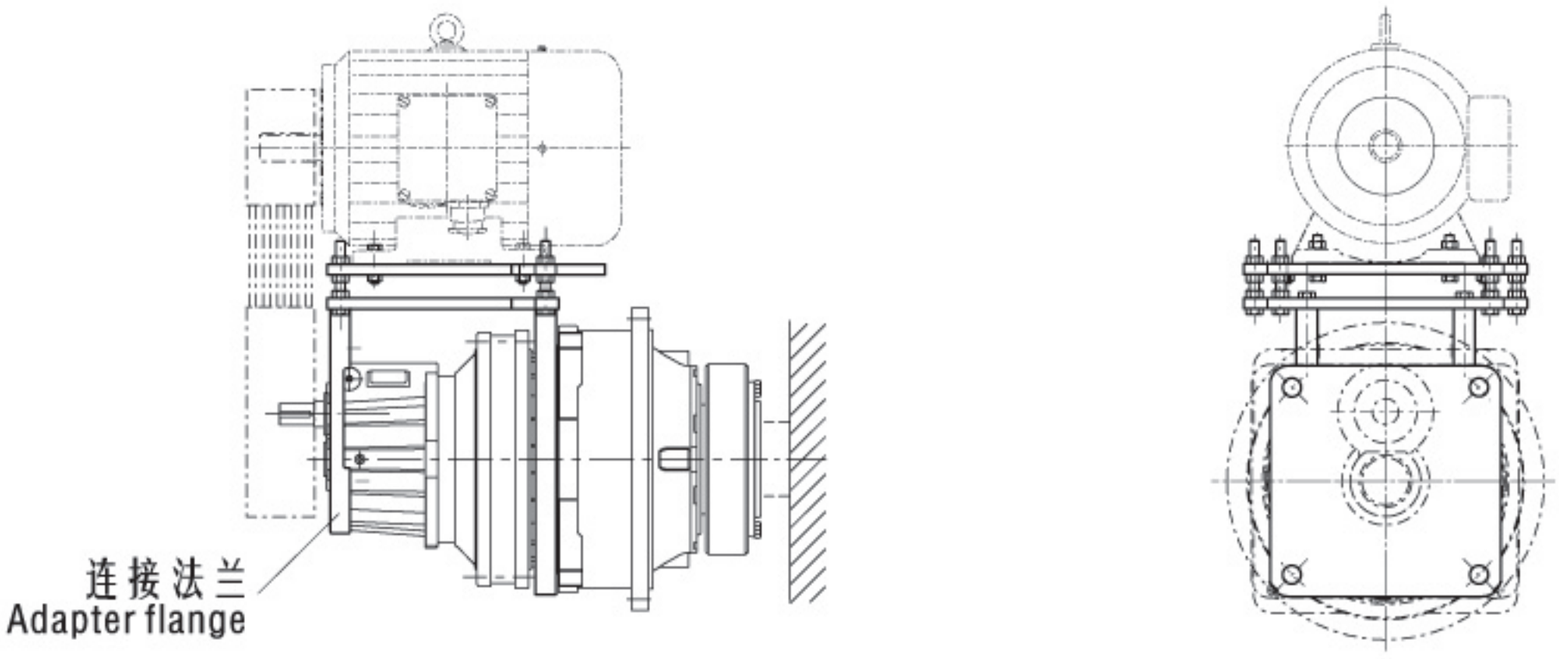

P

11.6 预紧扭矩：

11.6 Tightening torques:

法兰联接及底座安装时螺母的预紧扭矩。
Tightening torques for flange connections and foot-mounted design.

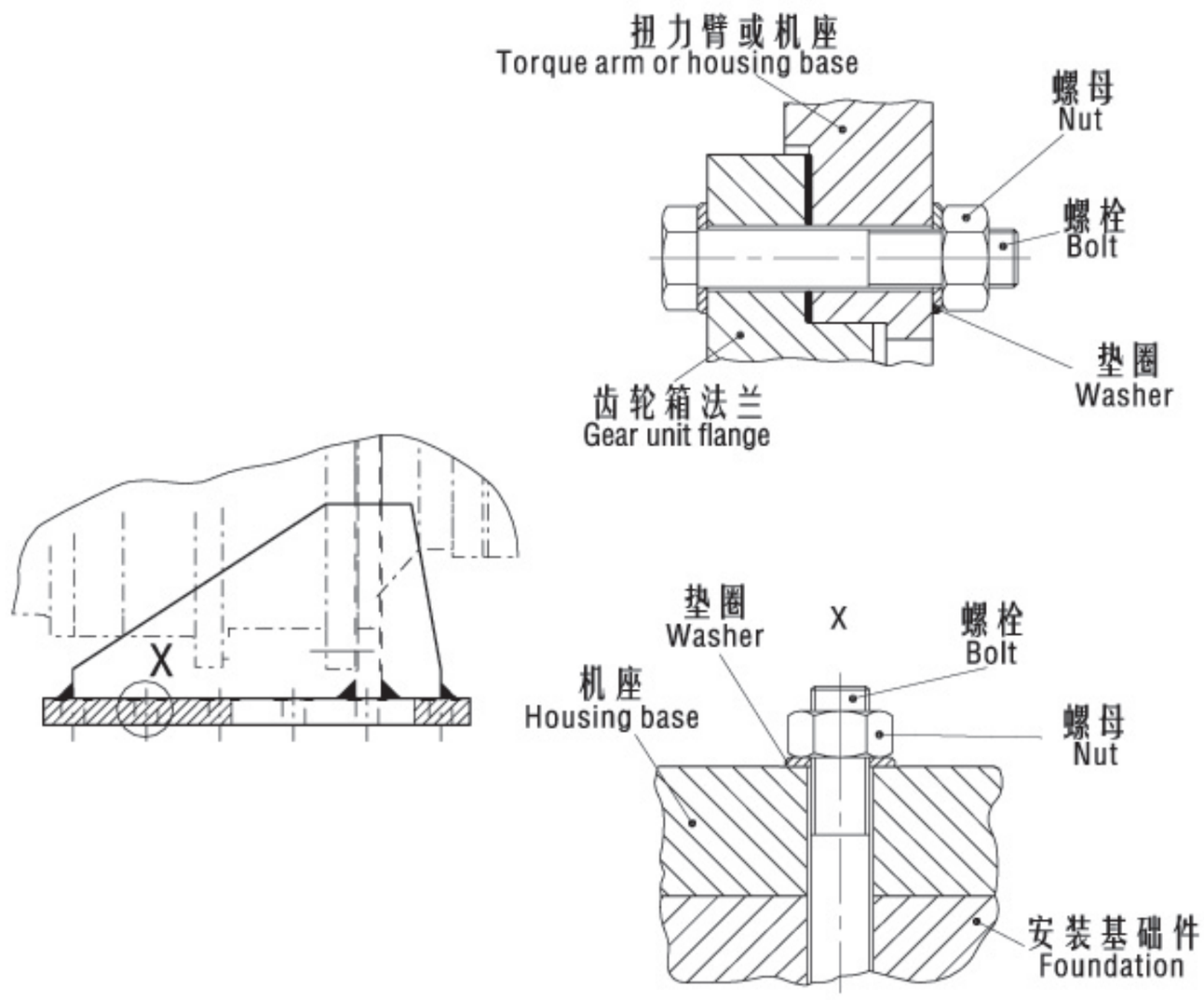

规格 Size	法兰 Flange		底座 Base	
	螺栓 Bolt (10.9)	预紧扭矩 Tightening torque (N · m)	螺栓 Bolt (8.8)	预紧扭矩 Tightening torque (N · m)
09	M 16	295	M 24	710
10	M 16	295	M 24	710
11	M 20	580	M 24	710
12	M 24	1000	M 24	710
13	M 24	1000	M 24	710
14	M 24	1000	M 30	1450
16	M 24	1000	M 30	1450
17	M 30	2000	M 36	2530
18	M 30	2000	M 36	2530
19/20	M 30	2000	M 42	4070
21/22	M 36	3560	M 48	6140
23/24	M 36	3560	M 48	6140
25/26	M 42	5720	M 56	9840
27/28	M 48	8640	M 56	9840
29/30	M 48	8640	M 64	14300
31/32	M 56	13850	M 64	14300
33/34	M 56	13850	M 64	14300
35/36	M 56	13850	M 72X6	20800

11.7 润滑油:　　11.7 Oil :

油量表Oil level (L)							
规 格 Type	P2N..	P2L..	P2S..	P2K..	P3N..	P3S..	P3K..
09	6	6	6	6	7	7	7
10	8	8	8	8	9	9	9
11	12	12	12	12	13	13	15
12	16	16	16	16	17	17	20
13	20	20	20	20	21	21	21
14	32	32	32	32	33	33	33
16	40	40	40	40	42	42	42
17	56	56	56	56	60	60	60
18	66	66	66	73	70	70	70
19	82	82	82	82	85	85	85
20	75	75	75	75	75	75	75
21	110	110	110		115	115	115
22	95	95	95		105	105	105
23	150	150	150		155	155	155
24	125	125	125		135	135	135
25	190	190	190		195	195	195
26	160	160	160		170	170	170
27	245	245	245		250	250	250
28	205	205	205		220	220	220
29	305	305	305		310	310	310
30	255	255	255		280	280	280
31	380		380		390	390	
32	315		315		360	360	
33	460		460		470	470	
34	380		380		430	430	
35	645		645				
36	535		535				

注:1)在环境温度-10℃～+40℃时,P系列润滑油牌号为VG320 (ISO粘度等级),附件代号V32。

2)以上齿轮箱油量为P.N在B5安装方位、P.K/P.L/P.S为B53安装方位时的油量，其它安装方位时的油量请来电咨询。

Note: 1)When ambient temperature is between -10℃～+40℃, VG320 (ISO viscosity class)should be used for P series and accessory code is V32.

2)The above oil levels are for P..N in mounting position B5 and P.K/P.L/P.S in mounting position B53. Other positions on request.

P

11.8 附件代号: 11.8 Accessory Codes:

代 号 Symbol	附 件 Accessories	示 例 Examples	
B61	电机安装架 Motor bracket		51/P
B42	输出支架 Output bracket		47/P
B43	输入支架 Input bracket	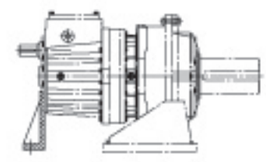	47/P
B41	扭转轴支架 Torsion shaft support	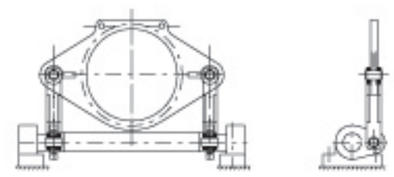	50/P
B62	P.K.,P.L. 立式安装带输入电机安装架 Motor bracket for P.K., P.L. vertical mounting	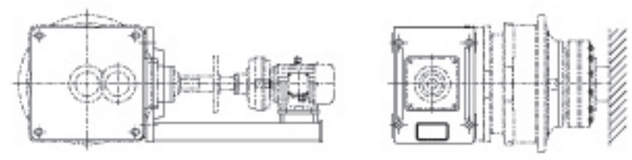	51/P
B63	P.K.,P.L. 水平安装时的电机机架（电机, 联轴器） Motor bracket for P..K, P..L horizontal mounting (motor, coupling)	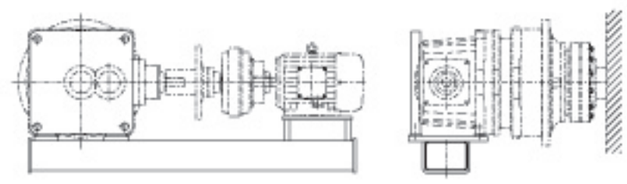	51/P
S43	补偿油箱浸油润滑 Oil compensating tank, dip lubrication	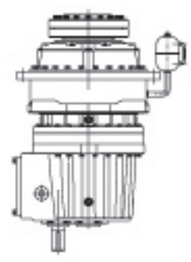	55/P
S32	电机油泵强制润滑 Motor pump, forced lubrication	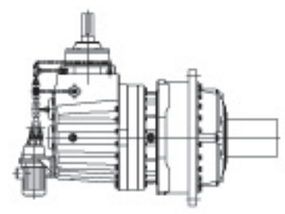	55/P
T71	扭力臂（单向） Torque arm (on one side)	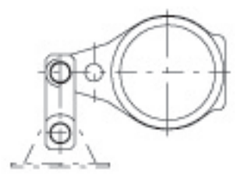	48/P
T72	扭力臂（双向） Torque arm (on both sides)	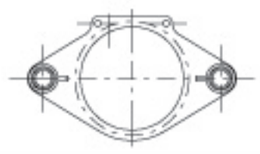	49/P
F21	冷却风扇 Fan	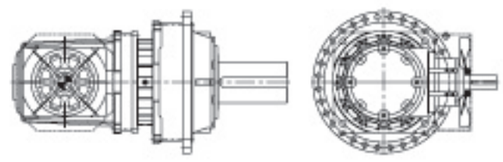	敬请垂询 On request
B11	逆止器 Backstop	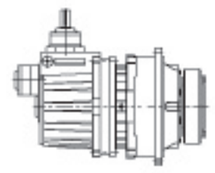	
B64	P.K.,P.L.立式安装,卧式电机安装架 Horizontal motor bracket fo P.K,P.L, vertical mounting	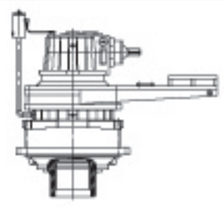	
B65	P.N.,P.S. 整体机架（电机,联轴器,齿轮箱） P.N., P.S. integral base(motor, coupling, gear unit)	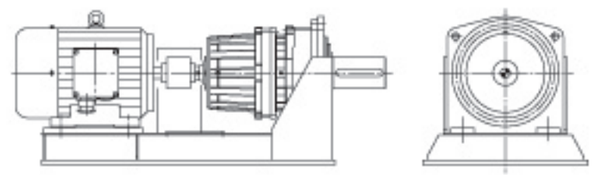	

P

12 润滑方式

12.1 P.N..,P.S.. 在安装方位为V1、V11、V3、V31时采用补偿油箱浸油润滑:

12 Lubrication System:

12.1 Oil compensating tank for vertical mounting positions V1,V11,V3,V31 of P.N.. and P.S..

补偿油箱(附件代号S43)
Oil compensating tank (code S43)

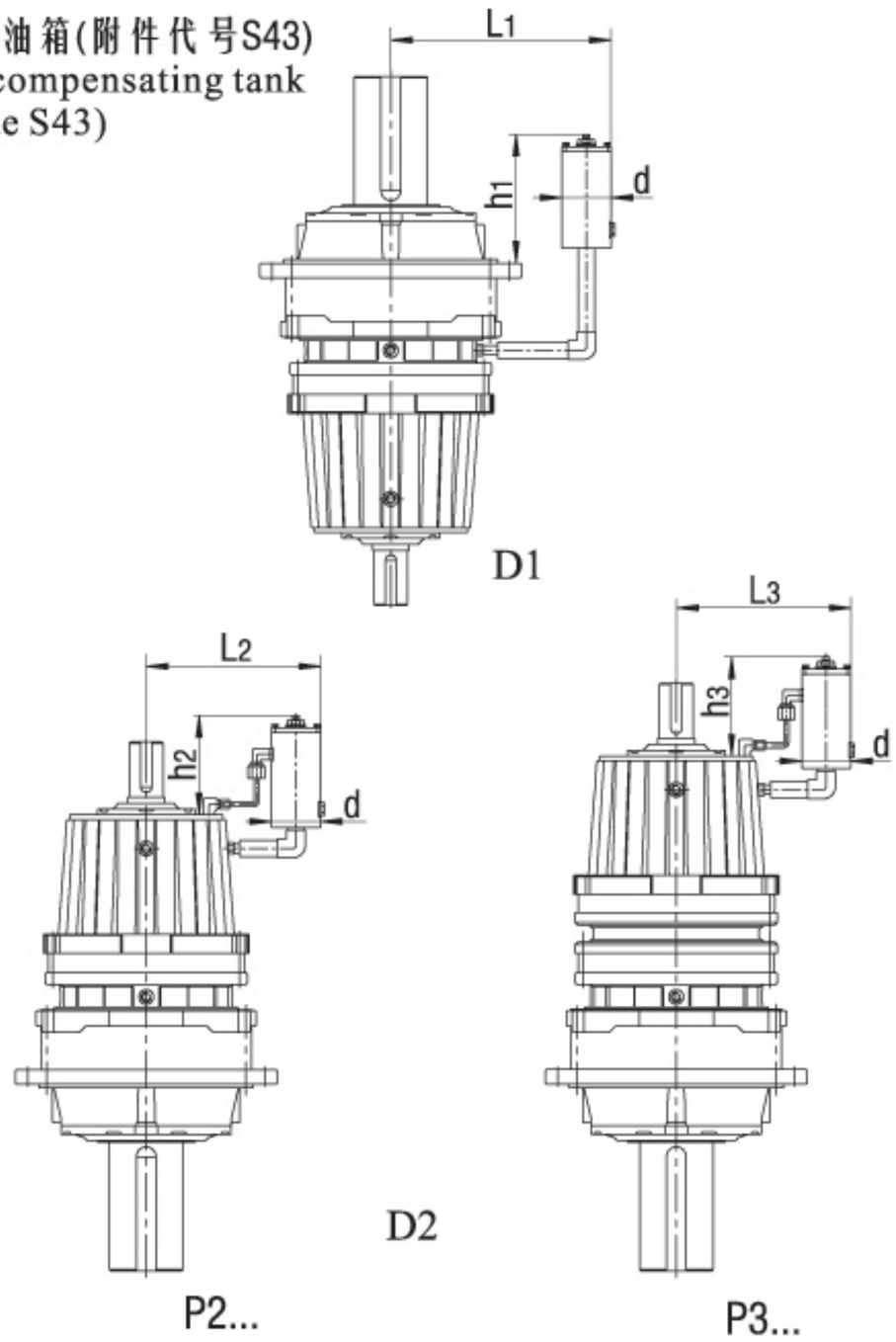

规格Size	L1	L2	L3	h1	h2	h3	d
09	345	285	285	210	160	160	ϕ80
10	375	285	285	210	160	160	ϕ80
11	400	320	285	210	160	160	ϕ80
12	435	320	285	210	160	160	ϕ80
13	500	400	285	250	180	160	ϕ120
14	530	400	285	250	180	160	ϕ120
16	555	450	320	250	180	180	ϕ120
17	620	450	320	250	180	180	ϕ120
18	635	500	400	250	180	180	ϕ120
19	650	500	400	250	180	180	ϕ120
20	650	500	400	250	180	180	ϕ120
21	730	550	400	250	180	180	ϕ120
22	730	550	400	250	180	180	ϕ120
23	780	550	450	250	180	180	ϕ120
24	780	550	450	250	185	180	ϕ120
25–36	敬请垂询 On request						

在垂直安装条件下，正常的润滑方式很难给予顶端轴承提供润滑油，为了确保润滑油的供应，齿轮箱内的油量必须加高，如上图（D1、D2）所示，通过补偿油箱加高油位，补偿油箱上装有通气帽通气。油箱可被安装在齿轮箱上，也可以安装在客户的机架上，实际尺寸和最终位置在订货时商定。

In case of vertical mounting position, normal lubrication system would fail to feed the overhead rolling bearings. To ensure an adequate supply of lubricants, the oil level has to be increased accordingly. As shown above (D1, D2), an oil compensating tank with breather is attached for this purpose. It can be fitted either to the gear unit or to the customer's machine frame. The actual dimension and final position will be decided when the product is ordered.

12.2 P.K..,P.L..和P.S.21-P.S.36在安装方位为B51时,需配备电动泵强制循环润滑:

12.2 Forced lubrication with motor pump for P.K.., P.L.. and P.S.21-P.S.36 in mounting position B51:

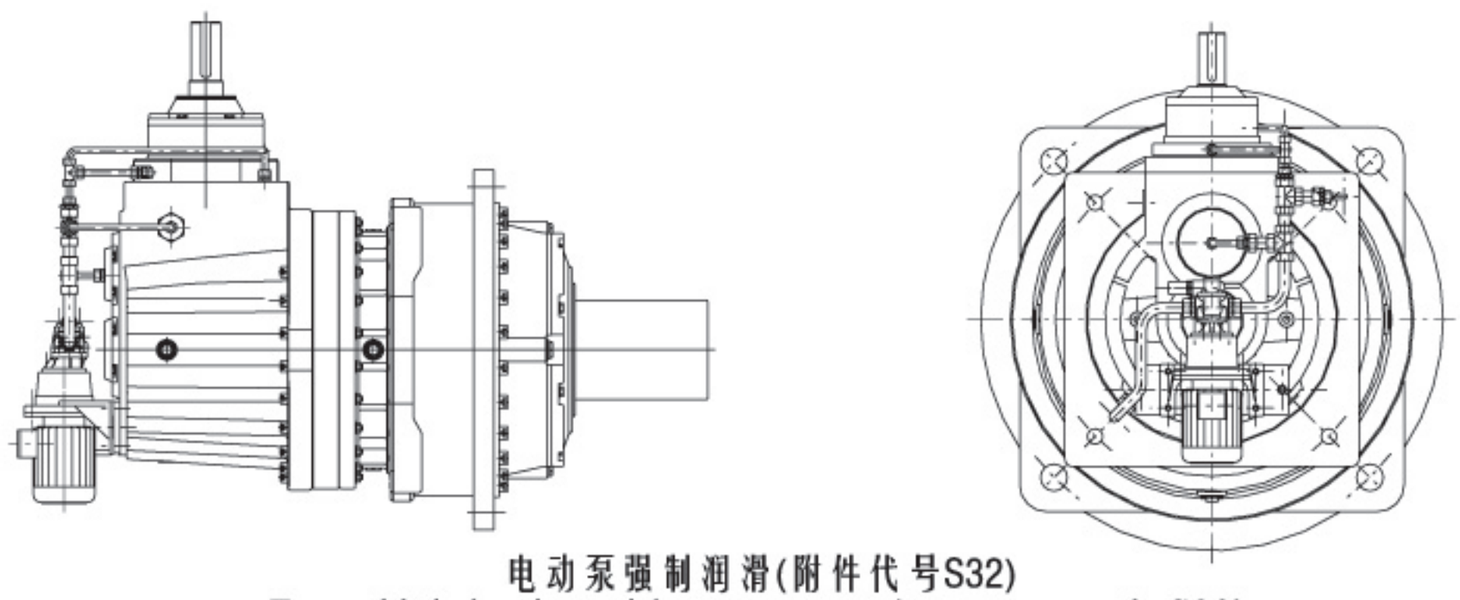

电动泵强制润滑(附件代号S32)
Forced lubrication with motor pump(accessory code S32)

注：安装方位，请参阅 4/P 。

Note: For mounting positions, see P4/P.

12.3 其它型号行星齿轮箱在其它安装方位时均采用油池飞溅润滑:

12.3 Planetary gear units in other mounting positions are usually lubricated with splash lubrication system

注意:选用润滑方式时,应校核齿轮箱热容量,特别是补偿油箱浸油润滑。

Note: Verify the thermal capacity of the gear units when selecting the lubrication systems, especially the mode of oil compensating tank.

P 系列行星齿轮箱
Series Planetary Gear Units

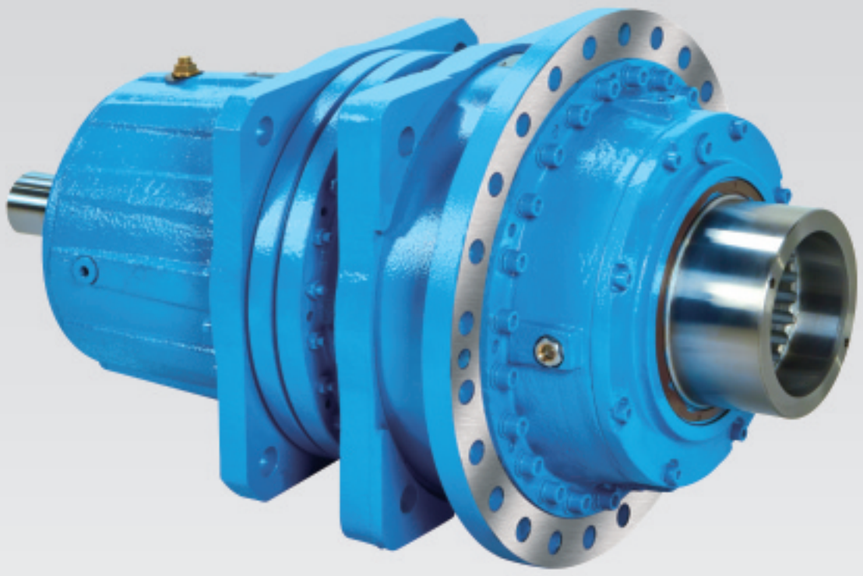

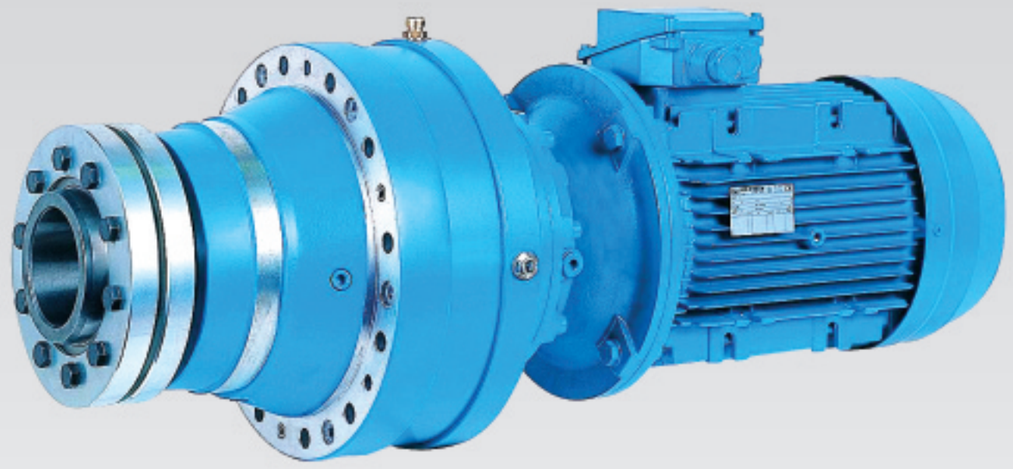

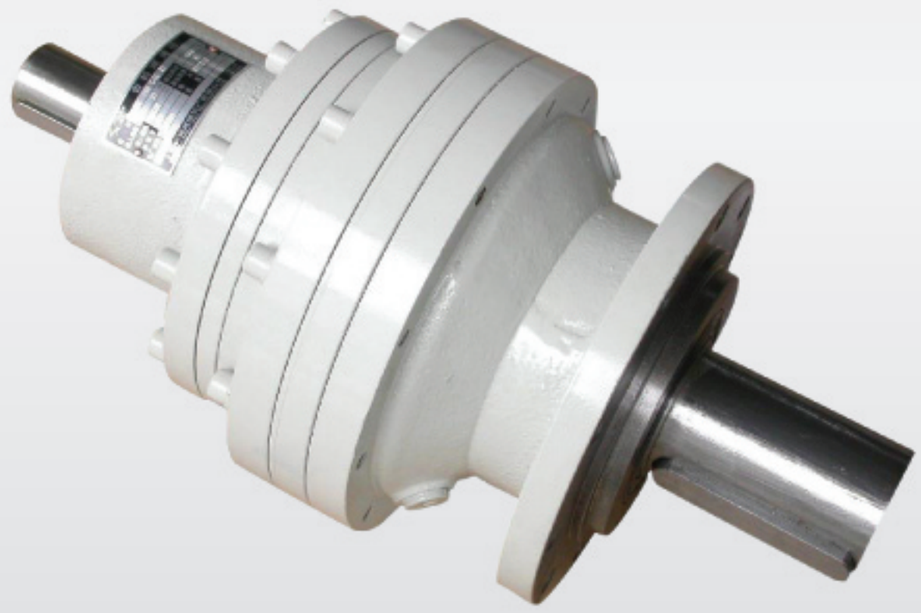

先进生产设备

齿轮检测

磨 齿

磨 齿

三坐标测量仪

卧式加工中心